Heliyon 9 (2023) e17331

Contents lists available at ScienceDirect

Heliyon

journal homepage: www.cell.com/heliyon

Analysis of factors affecting the adoption of IFRS in an emerging economy

Hien Thi Thu Nguyen [a], Hoan Thi Thu Nguyen [a], Cong Van Nguyen [a,*]

[a] *Faculty of Accounting and Auditing, Industrial University of Ho Chi Minh City (IUH), Viet Nam*

ARTICLE INFO

Keywords:
Accountant's qualification and experience
Complying with accounting regulations
Manager's qualifications and awareness
Tax pressure
The application of IFRS
Vietnam

ABSTRACT

This study examines the factors that facilitate or impede the voluntary adoption of International Financial Reporting Standards (IFRS) in an emerging market. We propose practical solutions that are necessary for successful IFRS implementation in enterprises. To collect research data, we surveyed 350 enterprises in Vietnam using a non-probability convenience sampling method. Using qualitative research methods (through case studies and expert surveys) combined with quantitative and structural equation modelling (SEM), this study analyses the causal relationship between the influencing factors and enterprises' willingness to apply IFRS voluntarily. Evidence indicates that compliance with accounting regulations and principles, qualifications and experience of accountants, accounting regimes and government circulars, capabilities and perceptions of managers, and the benefits of IFRS adoption positively impact the application of IFRS. In addition, the factors of firm size and audit activities have a positive effect on promoting the willingness of enterprises to apply IFRS, while tax pressure and accounting psychology negatively affect the application of IFRS. By contrast, tax pressure and accounting psychology harm the application of IFRS. The study has limitations regarding the sample size, geographical scope, and sampling method. Even so, together with other studies drawn in alternative contexts, our findings are helpful to account for policymakers, regulators and businesses in different emerging countries to adopt IFRS in their countries successfully. The new insights gained in this study can help overcome the limitations of the conventional IFRS approach and design appropriate policies and roadmaps to improve the applicability of IFRS. The present study contributes significantly to the theory and practice at the end of the preparatory phase and the beginning of the voluntary phase of IFRS adoption in Vietnam. This is also the period where Vietnamese policymakers have announced their strategic plan for full IFRS adoption by 2025.

1. Introduction

The trend of globalisation and the increase in international trade have urgently required countries to adopt IFRS quickly [1]. The primary objectives of applying accounting standards are to increase transparency and comparability of accounting information, and to improve the information environment of enterprises, thereby contributing to the reduction of income inequality [2,3].

With more than 160 countries currently allowing or requiring the adoption of IFRS for financial reporting [4], IFRS adoption has

* Corresponding author. Faculty of Accounting and Auditing, Industrial University of Ho Chi Minh City (IUH), Viet Nam.
E-mail addresses: nguyenthithuhien@iuh.edu.vn (H.T.T. Nguyen), nguyenthithuhoan@iuh.edu.vn (H.T.T. Nguyen), anhcongtuan@gmail.com, nguyenvancong@iuh.edu.vn (C.V. Nguyen).

https://doi.org/10.1016/j.heliyon.2023.e17331
Received 30 October 2022; Received in revised form 7 June 2023; Accepted 14 June 2023
Available online 15 June 2023
2405-8440/© 2023 Published by Elsevier Ltd. This is an open access article under the CC BY-NC-ND license (http://creativecommons.org/licenses/by-nc-nd/4.0/).

become an essential component of globalization, indicating accounting convergence. One could affirm that applying IFRS is both a right and a responsibility of enterprises, as it fulfils the need for consistency and enhances the quality of financial statement information for users. Countries that apply the same international standards will simplify accounting procedures and unify a language in financial statements. This has overcome the long-standing shortcomings of financial statements prepared according to the national accounting system, helping avoid misunderstandings about financial information that can lead to negative consequences severe economy. As a result, it provides investors with a more comprehensive view of the economy, boosting the performance of emerging capital markets [5].

The results of many studies assert the effectiveness of applying IFRS in different countries. The application of IFRS not only improves the quality of financial statements [6] but also helps to reduce income management, facilitate timely loss recognition, and provide more relevant values [7–11]. Furthermore, it enhances analysts' ability to forecast earnings and promotes investment [12,13] while aligning income with sustainable values [14]. The studies of [14,15] also show that companies that apply IFRS have income consistent with value, become more sustainable, and have a significantly higher level of corporate social responsibility disclosure than companies that do not apply IFRS. At the same time, using IFRS increases the relevance of information [16,17], improving the comparability of data [18]. It contributes to stock price increases and liquidity [19,20], attracting FDI in the short term [21].

Research on IFRS is widely published worldwide, but research on factors influencing (inhibiting or promoting) the adoption of IFRS at the national level is insignificant. Understanding the factors that affect the application of IFRS in enterprises is crucial for success. It also enables accounting policymakers to develop a practical roadmap for IFRS implementation and helps businesses find optimal solutions to apply IFRS successfully in their business activities [22]. recognize that audit committee attributes impact IFRS compliance and that financial reporting quality is higher than other corporate governance mechanisms [23]. find that large companies have a higher degree of compliance with IFRS disclosure requirements than others [24]. assert that the international comparability of financial statements under IFRS can only be achieved if the standards are interpreted and applied consistently across countries [25]. acknowledge that globalization, accounting regulators, and political circumstances positively relate to IFRS adoption, while cultural and accounting developments hurt IFRS adoption. One exciting thing about their study results is that the Saudi Arabian religion does not affect IFRS adoption [26]. reveal that in countries with high economic growth, along with the popular legal system and advanced education, the likelihood of IAS/IFRS adoption is more elevated [27]. indicate a two-way causal relationship between most developed behavioural variables and the decision to adopt or not accept IFRS. Their study also demonstrates that the choice of IFRS by developed countries is primarily legitimised by institutional and social pressures (institutional isomorphism) [28]. specify the diversity of opinions and arguments among different stakeholder groups over different periods in favour of mandatory IFRS adoption [29]. is aware that factors such as religion, culture and local investors may influence limited effect on adopting IFRS in Islamic banks.

Research by Refs. [30,31] has shown that, for SMEs, a country is more likely to apply IFRS if it lacks a specific set of accounting-financial standards, has a common law legal system, and the government has extensive experience and familiarity with IFRS. Moreover [32], again confirm that adopting IFRS for SMEs is significantly related to the quality of law enforcement, culture, transaction networks and economic growth.

As a developing country and an emerging economy in Asia, the need to apply IFRS in Vietnam is becoming increasingly urgent. In Vietnam, in 1999, the Ministry of Finance started researching and drafting accounting standards (VAS) and issued 26 VAS in 2005. Enterprises in Vietnam began to apply these standards. However, preparing and giving accounting standards is unprofessional; the content is outdated and still far from IFRS. The State of Vietnam has set out a roadmap to apply IFRS in 3 phases: (1) from 2020 to 2021: The Ministry of Finance prepares the necessary conditions to apply IFRS; (2) from 2022 to 2025: enterprises voluntarily apply IFRS if there is a need and enough resources; and (3) after 2025: Compulsory submission of consolidated financial statements for certain groups of businesses [33]. Up to now (October 2022), phase 1 has ended, and phase 2 has been started for more than half a year, but most of the work of phase 1 has not been completed. That fact shows that, with the proposed roadmap, the application of IFRS in Vietnam will face many challenges and barriers. The challenges mentioned above highlight the urgent need to study and consider the factors that affect the application of IFRS in Vietnamese enterprises. This will serve as a basis for promoting and guiding enterprises to adopt IFRS successfully.

This study aims to examine the relationship between the application of IFRS and the influencing factors to answer the questions: What factors affect the application of IFRS in Vietnamese enterprises? What are the elements' influence levels and trends on the IFRS application in Vietnamese enterprises? The impetus for this study comes from the recent moves of the Government of Vietnam on the mandatory and voluntary application of IFRS in enterprises to ensure the quality of financial statements, meet the accounting convergence requirements, and protect investors' interests.

Over the past, several studies referred to the application of IFRS in Vietnam [34,35]. examine the impact of factors belonging to the enterprise on applying IFRS [36]. identify factors affecting the application of IFRS in Vietnam in the eyes of business managers and auditors [37]. examine the causal relationship between accountants' awareness and willingness to apply IFRS [38]. analyses the applicability of IAS/IFRS [39]. estimate the benefits and disadvantages of applying IFRS. In particular [40],'s study investigates the contextual strategic process of IFRS during the transition from totalitarianism to a capitalist economy and the tensions between the parties involved. They find that market demand triggers IFRS contextualisation, which is institutionalised by the state. Although there are certain successes, most of the above studies are heavy on theory and subjective conjecture, and lack practical basis because they were carried out before and during the preparation period for the application of IFRS in Vietnam.

Moreover, most of these studies used descriptive statistics tools, Cronbach's Alpha test, exploratory factor analysis (EFA) and regression analysis, not SEM. To overcome the shortcomings above, our research will examine the interaction relationship between the application of IFRS and the influencing factors right in the early stages of IFRS application. The application of IFRS to an emerging economy like Vietnam - a country with many historical and political consequences that has just escaped from a centralized economy,

subsidized bureaucracy and moved to a market economy - is not a simple matter, solved in "soon and a night". That requires an elaborate and thorough preparation process according to the scientific roadmap, anticipating difficulties and obstacles. Therefore, in this study, the authors want to determine if any factors affect the application of IFRS in Vietnam.

To provide clarification, we have conducted a large-scale survey of 350 companies of varying sizes (including large, medium, and small) operating in different sectors (product manufacturing, services, trade, and construction). We employed quantitative methods, such as exploratory factor analysis (EFA), confirmatory factor analysis (CFA), and structural equation modelling (SEM), to examine the relationship between the factors that influence compliance and the application of IFRS in Vietnamese enterprises.

On another aspect, some previous studies have mentioned the factors affecting the application of IFRS. However, previous studies have not provided convincing evidence that in addition to macro-environmental factors, the application of IFRS to companies is also affected by many micro-factors belonging to each company. Therefore, our paper expands on previous studies by considering the possibility of the influence of micro and macro factors affecting the application of IFRS. We expect that the effects of factors on IFRS adoption have changed over time in emerging countries due to their broad participation in accounting convergence and global economic integration.

This process not only requires careful preparation of conditions related to the preparation of IFRS application from the Stateside but also requires companies to prepare necessary conditions regarding human resources, ready attitude and correct awareness of the roles, benefits and application trends. Specifically, we hope that in addition to the factors mentioned by previous studies, in an emerging economy like Vietnam, the application of IFRS is also affected by several new elements, such as the psychology of accountants, applied from tax policy, qualifications and awareness of management.

Our study continues to contribute to historical studies on the impact of factors on the use of IFRS in firms in an emerging economy. The research is both topical and meaningful in both theory and practice. The study is topical because the application of IFRS is a hot, global issue, attracting the attention of many parties, especially the tremendous pressure to protect investors and improve transparency in information disclosure. Furthermore, this research makes a significant contribution to building a theoretical framework, that fully and comprehensively systematizes the factors impacting the application of IFRS in enterprises. In practical terms, the study shows the influence of elements on the application of IFRS, thereby making recommendations to overcome/improve the necessary conditions and create favourable conditions for applying IFRS in enterprises in emerging economies, of which Vietnam is an example. Our findings are directly related to current famous debates about the roadmap, content, how to apply IFRS, and the factors affecting the application of IFRS in enterprises in Vietnam.

Our study is organised into six sections. Section 1 is the introduction; Section 2 focuses on the theoretical framework. Section 3 is the literature review and research hypothesis development. Section 4 deals with research methods, data and models. Section 5 is the experimental results and discussion, and section 6 is the conclusion.

2. Theoretical framework

This study addresses the factors affecting the adoption of IFRS in an emerging economy. Some previous studies have mentioned the use of one or several theories, such as agency theory, the decision-usefulness theory of accounting, the psychological theory, positive accounting theory, corporate governance theory, the economic theory of networks, isomorphism, neo-institutional theory, institutional theory [34,40–45]; however, we found that none of these theories could provide a complete explanation. Therefore, in this study, we integrate several approaches to present a more comprehensive presentation to clarify the relationship between factors in applying IFRS in an emerging economy.

Agency theory focused on the relationship between owners and agents and was developed by Ref. [46]. Based on this theory, information asymmetry between managers and shareholders can lead agents to prioritise their interests over those of the shareholders when managing the company. As a result, conflicts of interest can arise due to the separation between ownership and management rights, resulting in self-interested behaviour on the part of agents [47]. The application of IFRS will strengthen the principal's trust, helping them remove difficulties in verifying information and resolving conflicts of interest. Once IFRS is applied, accounting information will be disseminated, ensuring honesty, understanding and transparency, helping owners to reduce agency costs [48]. [49] argue that if corporate ownership is dispersed, the applicability of IFRS is indispensable to providing understandable information on financial statements [50]. based on agency theory to show the relationship between the firm's size and the voluntary application of IAS/IFRS. Also based on agency theory [51], explains the impact of factors such as firm size, ownership, leverage, and type of audit on compliance with IFRS [52]. agree with agency theory when they find that IFRS adoption provides a reliable signal in building and maintaining shareholder confidence in governance transparency and reliability of financial information. Based on arguments and inheritance of the above studies, we have used agency theory to explain the relationships between factors affecting the application of IFRS in companies, such as education level and managers' awareness, benefits of applying IFRS, and tax pressure và audit activities.

Ref. [53] develop *the Decision-usefulness theory* of accounting in the 1950s, providing orientation for all accounting and financial reporting options. According to this theory, the main objective of financial statements is to provide information helpful in making investment decisions [53]. argues that the key to decision utility theory is the goal of deterministic utility and considers that as the basis for building a coherent, pervasive structure of ideas. The Decision-usefulness theory is used as the foundation theory for developing the current IFRS accounting framework and accounting standards in many countries. This theory emphasizes that the fundamental task of financial statements is to provide valuable and relevant information for users to make economic decisions. At the same time, this theory also addresses the concept of cost-benefit balance, an important aspect to consider when setting standards. Therefore, this theory explains the goal of developing high-quality IFRSs to help investors and others make sound economic decisions considering the transition costs and benefits of applying IFRS [54]. affirms that the usefulness of information is essential and that the

subjects need to use accounting information based on quality financial statements with sufficient helpful information. Many studies use this theory when referring to the role and necessity of applying IFRS or as a basis for choosing accounting policies related to measuring and disclosing financial information [55–57]. Therefore, our study uses the theory of accounting usefulness to explain the intention to apply IFRS in enterprises and the impact of factors such as compliance with accounting regulations and principles, regulatory Government accounting and circulars, qualifications and awareness of managers, benefits of IFRS adoption, and audit practices.

The psychological theory of [58] argues that people in the organization have a significant role because material factors and human psychological needs determine the organisation's performance. At the same time, the psychological theory also suggests that the organization's accounting preparation and implementation should consider human relationships, such as relationships between levels, departments, and colleagues. Further, psychological theory can be used in accounting research to explain the actions and effectiveness of accounting activities by considering the influence on the mental and behavioural of individuals [59,60]. use this theory to investigate the business's extent and financial influence on the members' performance [61]. also uses this theory to evaluate subordinates through the information provided by accounting [62–64]. examines the impact of individuals on organizational budgeting using this theory [65]. applies psychological theory to management development by studying the relationships between organizations and individuals, between the development of the management accounting department and the mental development processes and considering the results of management accounting, other information and emotions of individuals in the organization. Similarly [66], also uses this theory to demonstrate that culture, through its influence on the accounting value of secrets, influence the interpretation of probability expressions used in IFRS to establish disclosures. Based on the above analysis, we use this theory to explain the impact of factors on the application of IFRS, such as the psychology of accountants, compliance with accounting principles and regulations, qualifications and experience of accountants, capabilities and awareness of managers, benefits of IFRS adoption, tax pressures, and audit practices.

According to *Positive accounting theory* [41,67], applying accounting to business activities and explaining the motives for presenting information in financial statements and phenomena arising in accounting or using statistical and econometric methods to examine research assumptions in accounting. Therefore, this theory has been widely applied in studies related to the selection of accounting policies, identifying factors, trends and their impact on adopting IFRS [41,51,68,69]. [41] argue that for a company to apply accounting standards or IFRS, it must be based on the principle of convergence when establishing accounting policy choices [70]. acknowledge that accounting mainly relies on this theory to explain management behaviour and accounting practices. Thus, the theory of analytic accounting is the basis for determining the factors and their impact on the application of IFRS in measuring, recording and providing accounting information on financial statements. Few studies have used evidence-based positive evaluation accounting theory to explain the intensity of challenges to accounting standards and apply additional disclosure and measurement practices [41,51,69].

Besides that, *the theory of institutional isomorphism* [71] refers to motivating a unit to become similar to the others if the same environmental conditions are present. Institutional quality has the effect of promoting and increasing the speed of financial development [72]. The tendency of countries worldwide to accept and apply IFRS is one of the manifestations of this theory. When applying IFRS, companies are subject to coercive pressure because companies can be dominated by political and legislative organizations, shareholders, investors, creditors, customers, or pressure from societal and cultural expectations.

Similarly, when applying IFRS, companies are subjected to simulation pressure due to uncertainty in the success of the implementation or the lack of clear objectives, or when the environment is uncertain. Therefore, companies will follow the model of other organizations, especially leading organizations in the same field, to achieve social recognition. This also explains why countries that are new or about to apply IFRS often take countries and businesses worldwide that have successfully applied IFRS, considering these countries and businesses as standard models to follow [45,73,74].

3. Literature review and hypothesis development

Researchers have long been interested in various aspects of IFRS adoption [75]. systematically examines why a country does not fully, partially or not adopt IFRS and classifies these factors into essential categories [76]. finds that private companies using IFRS have more growth opportunities, have more leverage, are more appreciated from the outside, increase the ability to raise external capital by issuing public bonds or equity, has more revenue and international operations [39]. forecast the benefits of applying IFRS for businesses, investors; policymakers; and state management agencies [2]. discover a decrease in information asymmetry in the market after the mandatory adoption of IFRS [43,77,78]. acknowledge that the required application of IFRS has recorded an improvement in the quality of financial statements, the quality of earnings, and an increase in forecast accuracy [13]. clearly show that adopting IFRS has improved the accuracy of financial analysts' earnings forecasts and increased investment [8]. demonstrate that most accounting quality indicators improve after the listed companies use IFRS [79]. examines the impact of fair pricing on the earnings quality of European banks before and after adopting IFRS 13. They find that the size of the banks hurts average earnings quality, while the ratio of assets to fair value has a significant positive impact.

Contrary to the above research results [9,20], confirm that improvements in accounting quality are achieved only in companies that voluntarily adopt IFRS, while firms that are forced to apply IFRS do not. Similarly [80], find that after applying IFRS to Australian listed companies, mature companies generate a better quality of earnings, resulting in a lower cost of capital. In contrast, in the other company, the quality of financial statements decreased, and the cost of equity increased [81]. conclude that companies manage more income during the IFRS application period and recognize losses not as timely as during the IAS application period [82]. admit that adopting IFRS leads to lower accounting quality [83]. identify that accounting quality has not improved significantly compared to before the application of IFRS.

Our study focuses on factors that directly affect compliance with accounting regulations, thereby indirectly affecting the application of IFRS in companies. These are accounting qualifications and experience, accounting regime and guiding circulars, tax pressure, manager's capabilities and awareness, psychology of accountants, benefits of adopting IFRS, firm size, and performance of audit activity.

3.1. Qualifications and experience of accountants

An accountant's qualifications and experience significantly affect compliance with accounting regulations and, therefore, IFRS adoption [36,77]. find that the higher the qualification of the accounting team, the easier it is to grasp the standards and the less difficult it is to put the measures into practice than less qualified people [84]. acknowledge that accounting qualification is a positive factor for IFRS adoption. They also find that it is less expensive to transition to IFRS in countries with high education systems than in countries with low education systems. To be effective [85], asserts that accountants must improve their professional qualifications and practical experience to apply accounting standards [24]. prove that individuals, occupations, and IFRS professional characteristics, experience, and knowledge influence IFRS adoption. Accountants must be fully trained in IAS/IFRS knowledge and have the practical experience to ensure compliance with accounting regulations and successful application of IAS/IFRS [86]. For emerging countries [85, 87], emphasise the importance of training and professional development for applying IFRS practically. Therefore, the first hypothesis is stated as follows:

- H_1: Accounting qualifications and experience positively impact compliance with accounting regulations.

3.2. Accounting regime and guiding circulars

The national accounting regime and guiding circulars essentially influence compliance with accounting regulations and the application of IFRS. Most studies in developed countries suggest that national accounting hinders and impedes the adoption of IFRS [13,30,88]. Countries that do not have their financial accounting standards are more likely to adopt IFRS than countries with their accounting standards [30]. [88] assert that the major obstacle to a country's readiness to adopt IAS/IFRS is the tax orientation of national accounting standards. The use of national accounting standards hinders the application of IFRS due to the complexity of comparing companies' financial statements in different international markets, making it challenging to evaluate investment opportunities that become costly and complex [13].

Unlike the results of the above study [36], find that the accounting regime - the legal basis for accounting activities in Vietnam - is a factor that has a positive impact on the application of IFRS. It is easy to see that in Vietnam, due to the influence of history, all accounting activities of enterprises must comply with the accounting regimes and guiding circulars of the State. Therefore, we form Hypothesis 2:

- H_2: Accounting regime and guiding circulars positively impact compliance with accounting regulations.

3.3. Pressure from tax policy

Pressure from the state's tax policy is a factor that weighs heavily on businesses, causing businesses to comply with tax laws rather than accounting regulations. Understanding the psychology of businesses that fear that violating tax policies will not only be penalized but also affect their reputation, the tax authority uses tax as a measure to force taxpayers to comply with the provisions of the law about tax. Therefore, tax policy is a factor that substantially impacts the adoption of IFRS. The greater the pressure from tax policy, the higher the tax compliance, leading to businesses losing focus on compliance with accounting policies. Research by Ref. [89] confirms that the tax system has a negative relationship with the decision to apply IFRS, while [30] asserts there is no evidence that the relationship between accounting and tax relates to adopting IFRS [90]. admits that firms applying IFRS engage in tax avoidance less than firms using local accounting standards. In contrast [91], determined that after the adoption of mandatory IFRSs, firms became more involved in seeking to reduce corporate tax rates through tax planning activities, even if such action was legal, worthwhile suspicious or even illegal. Participation in tax avoidance following the adoption of IFRS stems from the management of accruals and activities unrelated to accruals.

The above studies further promulgate the following hypothesis:

- H_3: Tax pressure hurts compliance with accounting regulations.

3.4. Qualifications and awareness of managers

The qualifications and awareness of the managers demonstrate their understanding. This factor promotes or hinders compliance with accounting regulations, and therefore, it also promotes or hinders the application of IFRS. The higher the level and awareness of the managers, the more promoting the adoption of IFRS and vice versa [87]. provides evidence that corporate governance factors improve compliance with IFRS requirements [36,85]. argue that managers' perceptions positively impact the IFRS application.

Contrary to the above results [92], find that overconfident CEOs who do not apply IFRS have lower future performance than unconfident CEOs. Furthermore, the impact of CEO overconfidence on corporate performance through earnings management depends on using mandatory IFRSs [30]. assert that there is no evidence that educational attainment is related to the decision to adopt IFRS.

From the critical role of the qualifications and awareness of managers in compliance with accounting regulations, the following

hypothesis emerges:

- H_4: Managers' qualifications and awareness positively impact compliance with accounting regulations.

3.5. Psychology of accountants

The psychology of accountants is a new factor we discovered in this study and is one of the critical factors affecting compliance with accounting regulations and the application of IFRS in Vietnamese enterprises. The general mentality of accountants is that they are afraid of change because they are not confident in their expertise, afraid of new and complicated things or because they are loyal to the past. As a result, accountants are unwilling to change the present and are either willing to be uncooperative or reluctant to participate or take no action to change [93,94]. [93,95] argue that the psychology of resistance comes from the mentality of dependence, fear of change or the belief that change will not bring high efficiency.

According to the psychological theory of [58], people in an organization have an essential role because physical factors and psychological needs determine the organisation's operation. The degree of conformity between an individual's behaviour in the organisation and the goals set by the manager to help the organization develop entirely depends on the behaviour of the manager and employee or vice versa. Psychological theory is widely used in research such as investigating the extent and financial influence of the business on the performance of its members [59,60]; evaluating subordinates through information provided by accountants [61]; examining the impact of individuals on organizational budgeting [62–64]; management development [65].

Through fact-finding, we found that most accountants in Vietnamese enterprises think that the way to process and present financial information according to IFRS is cumbersome, too complicated, time-consuming and costly, but ineffective. Moreover, because the habit and experience of working under the national financial accounting regime have been ingrained, accounting staff, due to lack of expertise, are afraid to switch to a new way of doing things [96]. Therefore, we believe this factor will negatively affect compliance with accounting regulations and the application of IFRS in Vietnam. Given this, the following hypothesis is proposed:

- H_5: The psychology of accountants hinders compliance with accounting regulations.

3.6. Benefits of applying IFRS

The decision-usefulness theory of accounting [53] guides all accounting and financial reporting options. According to this theory, the main objective of financial statements is to provide information helpful in making investment decisions. Therefore, this theory explains the goal of the high-quality IFRS development process to help investors and others make sound economic decisions based on consideration of switching costs and benefits. Many studies use this theory when referring to the role and necessity of applying IFRS or as a basis for choosing accounting policies related to measuring and disclosing financial information [55–57].

In the current intense globalisation and integration period, applying IFRS will benefit the economy and businesses. Thanks to accurate financial information will increase credit rating, attract foreign investors and investment capital, significantly reduce the cost of issuing stocks and bonds, increase capital market efficiency and promote cross-border investments. Studies emphasise that the application of IFRS helps enterprises to have a complete, transparent, accurate and highly reliable financial reporting system, accurately reflecting fair value, improving the comparability of financial statements, and ensuring global consistency in economic measurement, disclosure and transparency [2,7,8,11,13,14,16,19,88]. [97] proves that applying IFRS will help companies enjoy many advantages on international exchanges, from accessible listing and low capital costs to the comparability of information and improved compliance of transactions abroad [86]. confirm that although it costs a lot, applying IAS/IFRS brings many benefits to enterprises [30]. assert that the perception of the cost-benefit relationship and management and accounting skills have a limited impact on IFRS compliance of SMEs, and SMEs see little benefit from compliance with IFRS.

Contrary to the above results [82,83], find that the information quality did not change significantly compared to before applying IFRS. And research by Ref. [98] confirms that applying IFRS does not increase or decrease the quality of financial statements.

This discussion leads to the following hypothesis:

- H_6: The benefits of applying IFRS positively impact compliance with accounting regulations.

3.7. Firm size

Firm size significantly affects compliance with accounting regulations and the application of IFRS. The larger the enterprise size, the better the financial and human condition, and the higher the motivation and pressure to apply IFRS. On the other hand, due to their greater reliance on external sources of capital, large companies often seek to differentiate themselves in the market by providing high-quality financial reports. In Vietnam, listed companies - the big ones by law - are often the first to adopt voluntary IFRSs because they must disclose qualifying information to investors.

Ref. [99] affirm that it is necessary to classify enterprises by size to establish a separate IFRS system for each type of enterprise [100]. assert that the applicability of IAS/IFRS increases with firm size [101]. find that small businesses in Portugal are less likely to abandon their national accounting standards [23,35,102–105]. find a significant positive relationship between firm size and compliance level. Large enterprise size often leads to dispersion of ownership [49]. argues that if the ownership rights of enterprises are dispersed, the ability to apply IFRS is indispensable to providing understandable information on financial statements [50]. based on agency theory to show the positive relationship between the firm's size and the voluntary application of IAS/IFRS [51]. rely on the proxy approach to explain the impact of factors such as firm size, ownership, leverage, and type of audit on compliance with IFRS

[100]. assert that the applicability of IAS/IFRS increases with firm size [23,26,35,85]. find a significant positive relationship between firm size and compliance level.

Contrary to the above views [101], indicates that small businesses in Portugal are less likely to abandon their national accounting standards [106]. affirms that there is no evidence of an association between firm size and IFRS adoption.

From this, we make the following hypothesis:

- H_7: Firm size positively affects compliance with accounting regulations.

3.8. Performance of audit activity

Audit quality has an inseparable relationship with IFRS adoption and compliance. It can be said that audit quality is the first and most effective monitoring mechanism for IFRS adoption and compliance. Most studies suggest that independent auditing organizations and auditors positively impact adopting IFRS [107]. argues that audit activities significantly influence a company's decision to choose accounting standards [103,104,108,109]. also perceive the relationship and impact of independent audits on compliance with accounting standards [32]. acknowledge that audit and law enforcement quality are significantly related to IFRS adoption for SMEs [87]. provide evidence that contract auditors' perceived quality improves compliance with IFRS requirements [35]. assert that audit quality has a significant positive impact on IFRS adoption.

Similarly, studies by Refs. [10,77,110] also conclude the positive impact of external auditors' assessments on promoting companies to adopt IAS/IFRS, as well as complement the beneficial effects of IFRS [73]. indicate that stakeholder coercion (including auditors) affects the preparation process of enterprises to implement IFRS [22]. reveals that audit committee attributes have a higher impact on IFRS compliance and financial reporting quality than other corporate governance mechanisms [45]. believes that the auditor's encroachment into the corporate accounting field removes obstacles to implementing IFRS.

From another perspective, several studies address the impact of the audit committee on adopting IFRS [22,111]. conclude that the audit committee has a stronger influence on IFRS compliance and financial reporting quality than the audit by auditors from Big4 [83]. also demonstrate those audit committees are more effective in maintaining accounting quality under IFRS than in the previous Australian GAAP [51]. acknowledge that governance reform audit committee authorization has emerged as a significant determinant of compliance with mandatory disclosure requirements.

In Vietnam, research results on the impact of audit activities on the application of IFRS are not the same. While [35,109] affirm that audit activity has a positive effect on the adoption of IFRS [34,85], find that audit activities do not affect the application of IFRS. This is explained because (i) the studies were carried out before Vietnam applied IFRS, so there was a lack of factual basis, and (ii) the survey subjects are different; on the one hand, are the listed companies; and on the other side includes all types of businesses, in which mainly small and medium enterprises.

Hence, the following Hypothesis 8 is formed:

- H_8: Performance of audit activity positively impacts compliance with accounting regulations.

3.9. Compliance with accounting regulations

Compliance with accounting regulations directly impacts the application of IFRS in Vietnamese enterprises. Having lived with a command economy, bureaucracy, and subsidies for a long time, the habit of compliance - including compliance with accounting regulations - has been ingrained in the subconscious of accountants and business managers. Therefore, businesses always determine the need to strictly abide by accounting policies and take responsibility before the State to observe accounting policies and regimes. That compliance habit has a positive impact on the adoption and promotion of IFRS in businesses. While businesses may not see much benefit from adopting IFRS due to regulatory compliance, companies must apply IFRS. The institutional theory emphasizes the productivity, morality and legitimacy aspects of social structure [112,113], so it motivates organizations to learn from their peers about signs of appropriate behaviour rather than optimizing their decisions, practices and structures [114]. The theory of planned behaviour [115,116] also emphasizes that behavioural intentions are determined by attitudes towards the behaviour and the social norms surrounding that behaviour. In the context of IFRS adoption across countries, the philosophies of IFRS adopters will influence IFRS adoption behaviour (positive/negative).

On the other hand, the person performing the behaviour will be subject to social pressure from the work environment, leadership level, or current co-workers [23]. indicate that observation has a more positive and significant effect on IFRS adoption among listed companies than among unlisted firms [117]. identifies substantial changes in underlying financial measures due to changes in accounting regimes that impact compliance [44]. confirm that IFRS standards are optimal only if effective organizations monitor and enforce compliance.

For SMEs, the study by Ref. [89] shows that coercion and imitation have a positive impact on the adoption of IFRS. Similarly [32], acknowledges that the quality of law and regulation enforcement is positively related to the adoption of IFRS by SMEs.

Therefore, we put forward the following hypothesis:

- H_9: Compliance with accounting regulations positively impacts the adoption of IFRS.

4. Research methods

4.1. Research process and method

Our study uses SEM to identify and measure the impact of factors on the application of IFRS in enterprises in Vietnam. Research process through the following steps:

(i) Get expert opinions through specific case studies;
(ii) Assess the reliability of the scale;
(iii) Exploratory factor analysis (EFA);
(iv) Confirmatory factor analysis (CFA);
(v) Testing the linear structural equation model (SEM).

In step 1 (expert opinion/case studies), the experts selected for consultation must meet at least one of the following criteria:

(a) Knowing of IFRS and applying IFRS;
(b) Having an understanding of the benefits of applying IFRS and influencing the application of IFRS in practice;
(c) Have experience in auditing financial statements to help enterprises identify factors affecting the application of IFRS;
(d) Ability to propose policies and solutions applying IFRS.

Based on the above criteria, the author conducted interviews with five groups of experts: (1) a group of lecturers and researchers in accounting and auditing, (2) a group of chief financial officers and chief accountants, (3) a group of managers, and CEOs, (4) a group of independent auditors and (5) a group of officers from the tax authority.

The purpose of phase 1 is to synthesize previous studies in the world and Vietnam, combined with discussions with experts to confirm the correctness of research hypotheses. The research model is built with formal variables and scales based on data collected through survey questionnaires.

The second step of the study is to evaluate the scale's reliability on the correlation between the observed variables in each factor by Cronbach's Alpha test. The purpose of step 2 is to remove unsuitable observed variables in each factor when analysing EFA exploratory factors.

Next, the study carried out linear tests of EFA, CFA and SEM to confirm the influencing factors that impact the application of IFRS in Vietnamese enterprises. Based on the results of information processing through the SEM model and EFA and CFA analysis techniques, the study determines the degree of influence of factors on the application of IFRS in Vietnamese enterprises. Finally, after the research results are available, the authors recommend applying IFRS in Vietnamese enterprises most effectively.

Based on the research hypothesis, we build the formal following research model (Fig. 1).

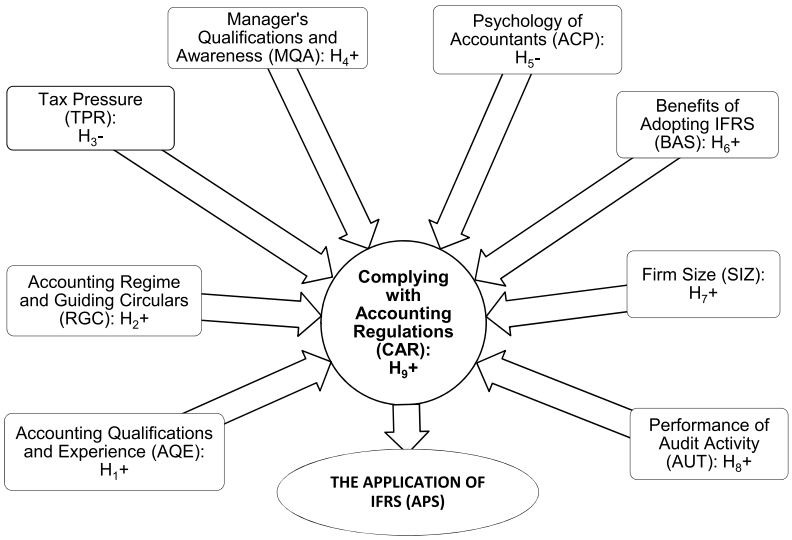

Fig. 1. Overview of the research model.

4.2. Research data

Research data was collected by convenient non-probability sampling based on acquaintance relationships or through the introduction and help of friends and relatives. To conduct the survey, the authors sent 350 questionnaires to 350 companies of different sizes (large, medium and small scale) operating in different fields (manufacturing, trading, services, construction), including audited and unaudited companies in provinces and cities in Vietnam. The respondents to the questionnaire were CFOs, CEOs, chief accountants and those directly related to the company's management with knowledge of IFRS. The survey results obtained 304 votes (equivalent to 86.7%); after removing 18 unsatisfactory votes (due to inappropriate information or lack of knowledge), the remaining 286 were in the analysis.

5. Research results and discussions

5.1. Descriptive statistics

Fig. 2 shows the structure of the survey sample by enterprise size. Out of the 286 valid questionnaires, 128 (44.8%) were from large-scale enterprises, and 158 (55.2%) were from medium-sized enterprises. Among 286 companies in the sample, the number of companies conducting independent audit activities is 131 companies, accounting for 45.8% of the total sample (including 15 medium-sized companies and 116 large-scale companies); the companies that do not conduct audits are 155 companies, accounting for 54.2% (including 143 medium-sized companies and 12 large-sized companies). The decision to select this sample is entirely consistent with the characteristics of Vietnam: large-scale companies and some medium-sized companies have just fully applied the accounting system and are eligible to apply IFRS. According to the law, listed companies are required to perform audits. Other companies are not required to perform the audit activity but can voluntarily audit if needed. The synthesis of the number of independently audited enterprises and the number of non-audited enterprises helps the author to have a basis for testing the Anova T-test on the difference between audited and non-audited firms affecting compliance with the accounting regime.

The results of descriptive statistics (Table 1) show that the average value of the observed variables of the factor has a relative degree of agreement in the range from 2.0210 (Tax pressures) to 3.7280 (Compliance with accounting regulations). The standard deviation of the variables is not high, showing that the survey results between subjects do not differ much. The survey subjects agreed with each other at a high level.

5.2. Exploratory factor analysis (EFA)

5.2.1. Check the reliability of the Cronbach Alpha scales

The results of testing the reliability of the scales using Cronbach's Alpha tool are reflected in the appendix (Table A1. Testing the reliability of the scales by Cronbach's Alpha reliability coefficient). The results show that:

- The APS factor has seven observed variables, and the common Cronbach Alpha coefficient of the variables in the group is 0.913. This result means the high reliability of the observed variables on the APS scale. The results also show that the Corrected Item - Total Correlation index of the APS1 variable has the smallest value of 0.601, and the maximum value of the APS2 variable is 0.809. This shows a close relationship between the group's observed variables and the observed variables that show very well the characteristics and properties of the APS factor.

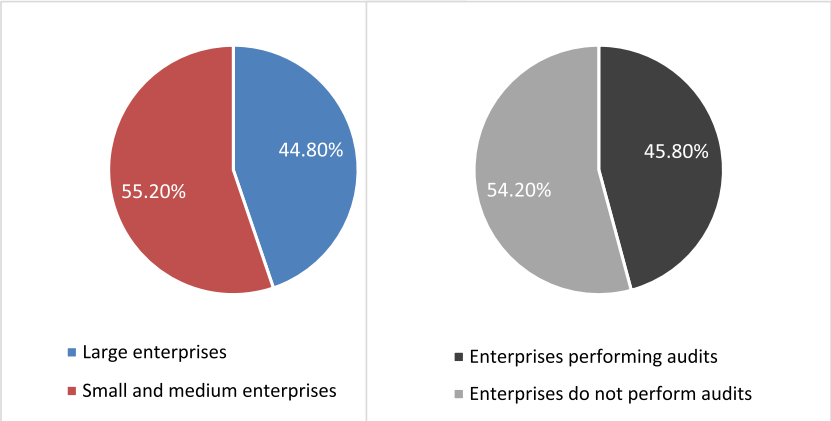

Fig. 2. Characteristics of surveyed enterprises in terms of size and audited ratio.

Table 1
Descriptive statistics of variables included in the research model.

Variable name	Obs.	Mean	Std.	
			Deviation	Variance
Compliance with accounting regulations (CAR)	286	3.7280	0.58901	0.347
Accounting qualifications and experience (AQE)	286	3.6008	0.68358	0.467
The Benefits of applying IFRS (BAS)	286	3.3485	0.82656	0.683
Tax pressures (TPR)	286	2.0210	0.37274	0.139
Manager's qualifications and Awareness (MQA)	286	3.4762	0.77969	0.608
The psychology of accountants (ACP)	286	2.1748	0.59039	0.349
Accounting regime and guiding circulars (RGC)	286	3.5140	0.84073	0.707
The IFRS adoption (APS)	286	3.5040	0.73495	0.540

- The CAR factor has five observed variables; the common Cronbach Alpha coefficient of the variables in the group is 0.842, the Corrected Item - Total Correlation index of the CAR3 variable has the smallest value of 0.584, and the CAR4 variable has the largest value of 0.689. This result also confirms the high reliability and the close relationship between the observed variables of the group.

The remaining factors (AQE, RGC, TPR, MQA, ACP and BAS) all have a relatively high overall Cronbach Alpha coefficient (AQE = 0.907, RGC = 0.899, TPR = 0.673, MQA = 0.890, ACP = 0.818, BAS = . 0.862) and the Corrected Item - Total Correlation index is over 0.3 (except for the variable TPR6 - The tax officer's capacity has not met the job requirements = 0.207, is considered to have no contribution, so it is excluded from the evaluation coefficient.). Finally, there are eight factors with 40 observed variables that are statistically significant and have the necessary reliability coefficients (all variables have Cronbach's alpha >0.6; correlation coefficient with the sum of variables in the scale >0). ,3. That shows that the components of the scale are reliable and suitable for analysis in the following steps.

5.2.2. Test the relationship between qualitative variables and compliance with accounting regulations

Because audit performance is a qualitative variable with two values (1, 2), the study uses the T-test to evaluate the impact of the audit performance and accounting compliance variables. Hypothesis H_0 is posed: There is no significant difference in the level of compliance with accounting regulations between audited and unaudited enterprises. The results of the T-test show that: p = 0.000, allowing to reject the hypothesis H_0 (meaning that the two groups of samples are not the same). The test results on the mean difference sig = 0 also show a material difference between compliance with accounting regulations between unaudited and audited enterprises.

Regarding the relationship between the variable of enterprise size and compliance with accounting regulations since the enterprise size is a qualitative variable receiving two values (medium and large), the study uses Independent Samples T-Test. Hypothesis H0 is proposed: There is no significant difference in accounting regulation compliance between groups of enterprises of different sizes. Homogeneity of variance results Sig. = 0.000, allowing to reject the hypothesis Ho, the variance between the sample groups is not uniform. The compliance with accounting regulations of enterprises of different sizes is different, and the factor of enterprise size impacts compliance with accounting regulations.

Besides, the study also tested the assumption that there is no correlation between the firm size variable and performed the audit by chi-square test with the Sig <0.05. The test results showed that Sig. = 0.000 proves that two independent variables, firm size and audit performance, are correlated. The larger the enterprise size, the higher the percentage of enterprises performing audits of financial statements.

5.2.3. EFA analysis for the scales of impact factors

After removing TPR6, all 33 observed variables belonging to 7 influencing factors (excluding the performance of audit activity variables and firm size) were included in the analysis. Variables closely related will be grouped and presented as factors affecting IFRS application in Vietnam enterprises. To test the relationship between the measured variables, the study uses KMO and Bartlett's test and is based on two hypotheses:

Table 2
Total variance explained.

Component	Initial Eigenvalues			Extraction Sums of Squared Loadings			Rotation Sums of Squared Loadings		
	Total	% of Variance	Cumulative %	Total	% of Variance	Cumulative %	Total	% of Variance	Cumulative %
1	6.170	18.696	18.696	6.170	18.696	18.696	4.195	12.713	12.713
2	3.424	10.377	29.072	3.424	10.377	29.072	3.567	10.808	23.521
3	3.146	9.533	38.605	3.146	9.533	38.605	3.134	9.496	33.017
4	2.681	8.124	46.729	2.681	8.124	46.729	3.129	9.482	42.499
5	2.373	7.191	53.920	2.373	7.191	53.920	2.965	8.986	51.485
6	2.104	6.376	60.295	2.104	6.376	60.295	2.432	7.370	58.855
7	1.929	5.845	66.141	1.929	5.845	66.141	2.404	7.286	66.141
8	…								

- Hypothesis H_o: The variables in the population are not correlated with each other.
- Hypothesis H_1: The variables in the population are correlated with each other.

The results of the EFA analysis show that the Barlett test has sig = 0.000 and KMO = 0.821, so hypothesis H_0 is rejected. Hypothesis H_1 is accepted (there is a correlation between variables in the population). At the same time, the scales and data were also considered suitable for analysis.

Table 2 shows that seven factors meet the Eigenvalue >1 criterion. Therefore, seven elements are drawn at a cumulative level of 66.1%. That means that 66.1% of the variation of factors is explained by the observed variables (composition of each element).

The results in Table 3 of the EFA analysis also show that the factor loading coefficients are all greater than 0.5, and there is no case where the variable uploads both factors simultaneously with the load factor close to each other. Hence, the factors ensure convergent and discriminant validity. On the other hand, there is no mixing of elements, so the question of one aspect is not confused with the question of the other. Therefore, in addition to the two factors of enterprise size and audit performance, after EFA analysis, all seven independent aspects were kept unchanged and did not increase or decrease.

To confirm the reliability of the scale again, we use AMOS software. The result shows that the scales BAS, AQE, MQA, and RGC have aggregate reliability and extracted variance >0.5; ACP and TPR scales have extracted variance of 0.484 and 0.431, respectively. Although the ACP and TPR scales have extracted variance <0.5, they are still within acceptable limits. Therefore, the study continued to analyze CFA with 33 observed variables belonging to 7 factors, directly and indirectly, affecting APS, including CAR, AQE, RGC, TPR, MQA, ACP and BAS.

5.2.4. Analyze the impact of qualitative variables on compliance with accounting regulations

The relationship between firm size, audit performance and compliance with accounting regulations in the multiple linear regression model has the following form:

$$CAR = \beta_1 SIZ + \beta_2 AUT$$

Table 3
Rotated component matrix.[a].

	Component						
	1	2	3	4	5	6	7
AQE1	.852						
AQE2	.880						
AQE3	.731						
AQE4	.859						
AQE5	.838						
AQE6	.683						
RGC1		.859					
RGC2		.861					
RGC3		.845					
RGC4		.850					
TPR1			.606				
TPR2			.632				
TPR3			.677				
TPR4			.708				
TPR5			.745				
MQA1				.821			
MQA2				.854			
MQA3				.796			
MQA4				.854			
MQA5				.793			
ACP					.667		
ACP2					.751		
ACP3					.780		
ACP4					.806		
ACP5					.790		
BAS1						.857	
BAS2						.888	
BAS3						.852	
CAR1							.767
CAR2							.784
CAR3							.727
CAR4							.770
CAR5							.757

Extraction Method: Principal Component Analysis.
Rotation Method: Varimax with Kaiser Normalization.
a. Rotation converged in 6 iterations.

The results of multivariate regression analysis showed that the adjusted R-squared value was 0.133. This means that 13.3% of the change in the dependent variable (compliance with accounting regulations) is explained by the independent variables included in the regression analysis (enterprise size and audit performance), and out-of-model variables and random error explain the remaining 86.7%.

To test the fit of the regression model through ANOVA analysis, the study hypothesizes H_0: R2 = 0. The F test was used to test this hypothesis. The test results show that Sig = 0.000. Thus, hypothesis H_0 is rejected, i.e. R2 ≠ 0 is statistically significant, and the regression model is suitable.

Table 4 reflects the regression results on the relationship between the CAR variable and the SIZ and AUT variables. Accordingly, the VIF coefficients of the independent variables are equal to 2.904 < 10, showing no multicollinearity.

The regression coefficient Sig test t of the independent variables is less than 0.05, so the independent variables are significant to explain the dependent variable, and no variable is excluded from the model. Regression results also show that all regression coefficients are greater than 0. This proves that the independent variables SIZ and AUT included in the regression analysis have the same effect on the dependent variable CAR.

The unstandardised regression model has the following form:

CAR = 3054 + 0.241SIZ +0.223AUT.

The firm size factor positively influences accounting compliance and IFRS application. Large companies not only have sufficient financial and human resources but also are under much pressure to apply IFRS. This result is entirely consistent with the studies of [23,26,35,85,100,105].

The factor of audit activities has a positive impact on compliance with accounting regulations. This result is also consistent with the research results of [10,77,107,109,110], and [35]. Like the size factor, in Vietnam, listed companies are required to carry out independent audits and currently, listed companies are one of the subjects that voluntarily apply for IFRS.

5.3. Confirmatory factor analysis

Cronbach's alpha test and EFA analysis removed TPR_6; the remaining 28 variables belonging to 6 factors affecting CAR, including AQE, RGC, TPR, MQA, ACP and BAS, were included in the CFA analysis.

Fig. 3 shows the results of the normalised estimation of the main parameters of the model through the CFA test. Accordingly, the compliance scale with accounting regulations has a measurement value that satisfies the conditions with Chisquare = 1593 < 3; TLI = 0.941 > 0.9; CFI = 0.948 > 0.9; GFI = 0.881 < 0.9. In addition, the correlation coefficient between the concepts is all <1 with the significance level P = 0.000, and the concepts in the scale of compliance with accounting regulations reach a discriminant value.

The results of standardized estimation of the main parameters of the model through the CFA test also show that the scales complying with accounting regulations have a good measurement value with Chisquare = 1593 < 3; TLI = 0.941 > 0.9; CFI = 0.948 > 0.9; GFI = 0.881 < 0.9. In addition, the correlation coefficients between the concepts is all <1 with the significance level P = 0.000, and the concepts in the scale of compliance with accounting regulations reach a discriminant value.

Table 5 reflects the unstandardised estimation results of the main parameters of the model (the normalised estimation results are presented in Fig. 3 above). This result proves that the correlation relationships in the model have statistical significance with 95% confidence (p = 0.000 < 0.05). Accordingly, AQE has a direct and positive relationship with the factors MQA, RGC, ACP, BAS, and TPR; MQA has a direct and positive relationship with RGC, ACP and BAS but is negative with TPR. Similarly, RGC has a direct and positive relationship with BAS and TPR but a negative one with ACP.

Fig. 4 shows the results of the CFA test:

- Relevance: Chi-square/df result = 1561; TLI = 0.933, CFI = 0.940, GFI = 0.864 and RMSEA = 0.044. These indicators confirm that the research model is completely consistent with the research data and confirm the unity of research concepts.
- Convergence value, unidirectionality, discriminant value and reliability: The unstandardised weights are statistically significant (*P*-value <0.05), and the standardised weights are>0.5. Thus, the scales are guaranteed to achieve convergence value, unidirectionality, discriminant values, and reliability.

5.4. Test theoretical model and research hypotheses by SEM

Fig. 5 reflects the results of testing the theoretical model and the research hypothesis. The results show that the proposed model has satisfactory indexes (Chi-square/df = 1.617 (p = 0.00); GFI = 0.831; TLI = 0.917; CFI = 0.924; RMSEA = 0.047). This proves that the theoretical model is suitable for the survey data.

Table 4
Coefficients.[a]

Model		Unstandardised Coefficients		Standardised Coefficients	t	Sig.	Collinearity Statistics	
		B	Std. Error	Beta			Tolerance	VIF
1	(Constant)	3.054	.105		29.189	.000		
	SIZ	.241	.111	.204	2.170	.031	.344	2.904
	AUT	.223	.111	.189	2.007	.046	.344	2.904

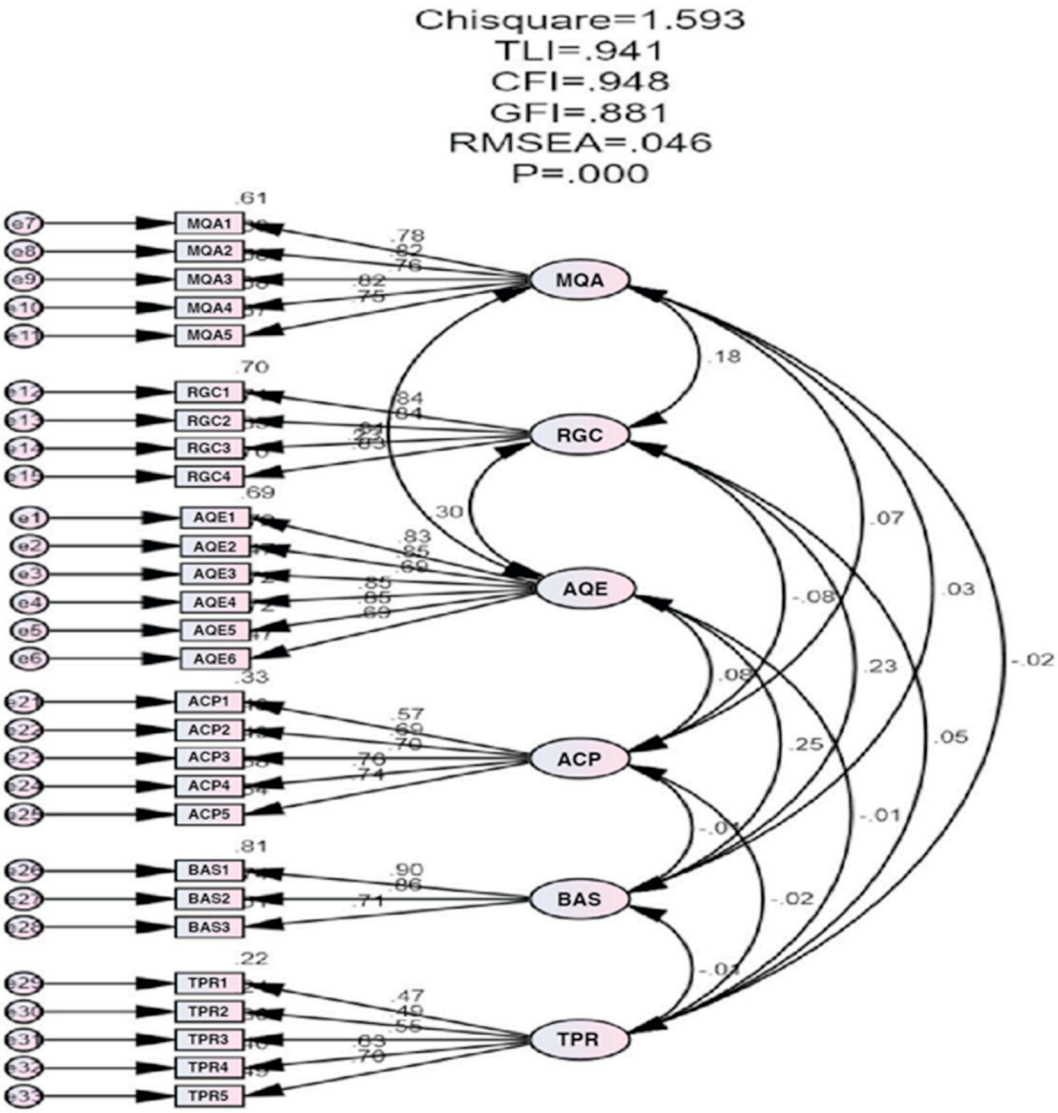

Fig. 3. CFA results on the scale of compliance with accounting regulations.

Table 5
Regression coefficients of relationships (unstandardised).

Correlated			Estimate	S.E.	C.R.	*P*-value
AQE	<–>	MQA	0.106	0.032	3.353	***
AQE	<–>	RGC	0.161	0.038	4.291	***
AQE	<–>	ACP	0.021	0.019	1.113	0.266
AQE	<–>	BAS	0.134	0.037	3.637	***
AQE	<–>	TPR	−0.003	0.014	−0.178	***
MQA	<–>	RGC	0.1	0.039	2.59	0.01
MQA	<–>	ACP	0.021	0.02	1.004	0.016
MQA	<–>	BAS	0.015	0.038	0.388	***
MQA	<–>	TPR	−0.004	0.015	−0.269	***
RGC	<–>	ACP	−0.028	0.024	−1.176	***
RGC	<–>	BAS	0.154	0.045	3.392	***
RGC	<–>	TPR	0.011	0.018	0.643	***

Note: *** means 0.01.

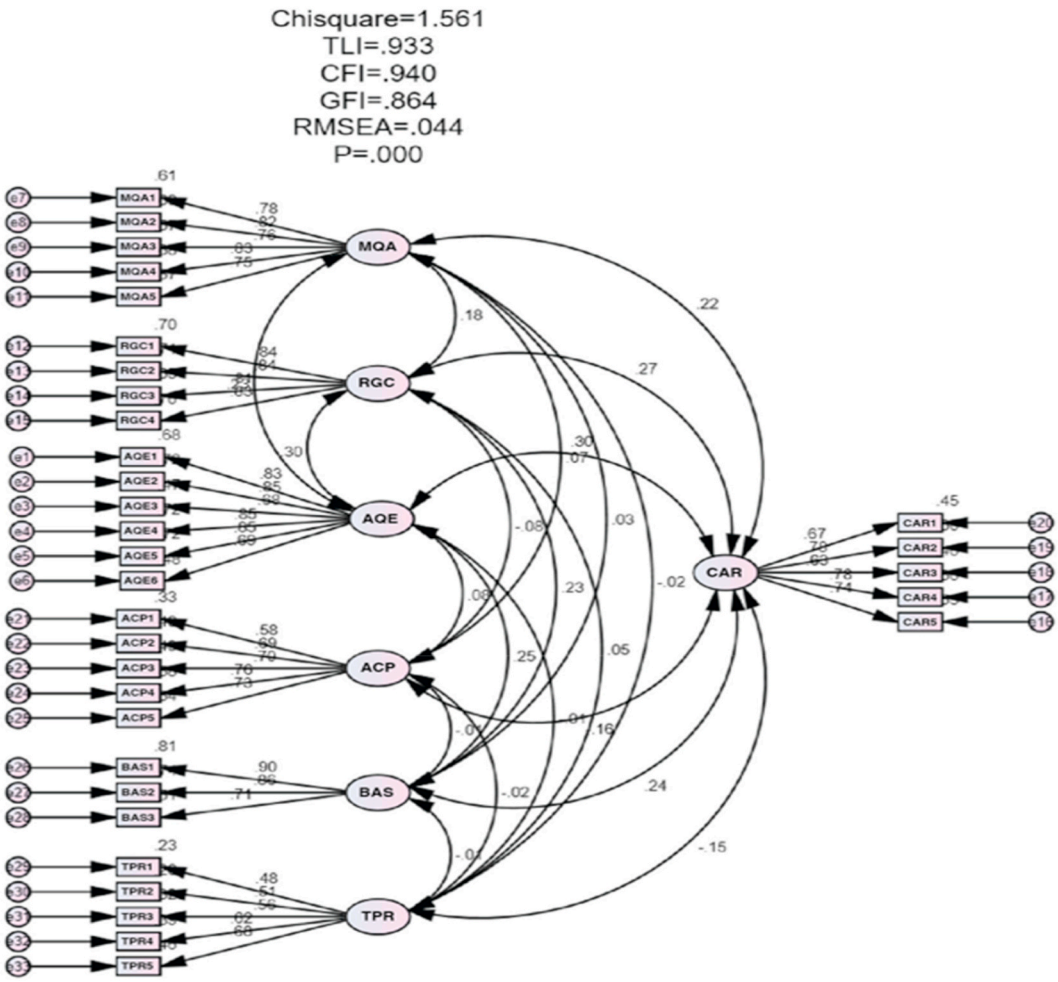

Fig. 4. Results of CFA affirmative analysis.

Recorded from the test results by SEM model, five factors, AQE, MQA, RGC, BAS and CAR, have a positive impact on the application of IFRS and have statistical significance; in which CAR factors have a direct effect, four factors, AQE, MQA, RGC, BAS have an indirect impact. Fig. 5 also shows that the two factors, TPR and ACP, have opposite effects on applying IFRS and have statistical significance.

Table 6 reflects the results of testing the cause-and-effect relationship between the concepts in the theoretical (unstandardised) model. Accordingly, the *P*-value <0.05 shows that the estimated correlation coefficient is associated with the standard error (S.E.) of the correlations of the pairs of concepts reaching discriminant values.

At the same time, the normalised estimation results also show that all variables in the research model impact APS. The results of the model estimation test by the Bootstrap method (Table 7) with $N = 1000$ also show that the Bias and SE-Bias values are not large, C.R. $<$ 1.96, so it can be said that the bias is minimal and not statistically significant at the 95% confidence level. Therefore, the estimated model can be trusted.

Table 8 reflects the test results with the research hypotheses. According to the recorded test results, there is no difference compared to the initially proposed research model. Specifically, six independent variables that have a direct, positive impact on CAR and thus have an indirect, positive relationship with APS include AQE, RGC, MQA, BAS, SIZ and AUT; two variables, SIZ and AUT, have a direct and adverse relationship with CAR and therefore have an indirect and antagonistic relationship with APS. The variable CAR has a positive relationship, promoting the variable APS.

Research results show that compliance with accounting regulations has a direct, positive and decisive influence on the success or failure of adopting IFRS in Vietnam. Although there have been some studies mentioning the impact of this factor on the application of IFRS [23,44,89], our study is the first to prove and confirm that it is a decisive factor affecting the adoption of IFRS in an emerging economy. This result is consistent with the Theory of institutional isomorphism and reality in Vietnam - a country that has experienced years of war with a bureaucratic, subsidized, centralised economy and institutional monopoly politics - the habit of complying with the coercive regulations of the state has long become a consciousness, ingrained in the subconscious of most people. Complying with coercive rules in the accounting field is also not out of the ordinary sense of compliance. Therefore, this factor has a direct, positive and decisive impact on adopting and promoting IFRS in Vietnamese enterprises.

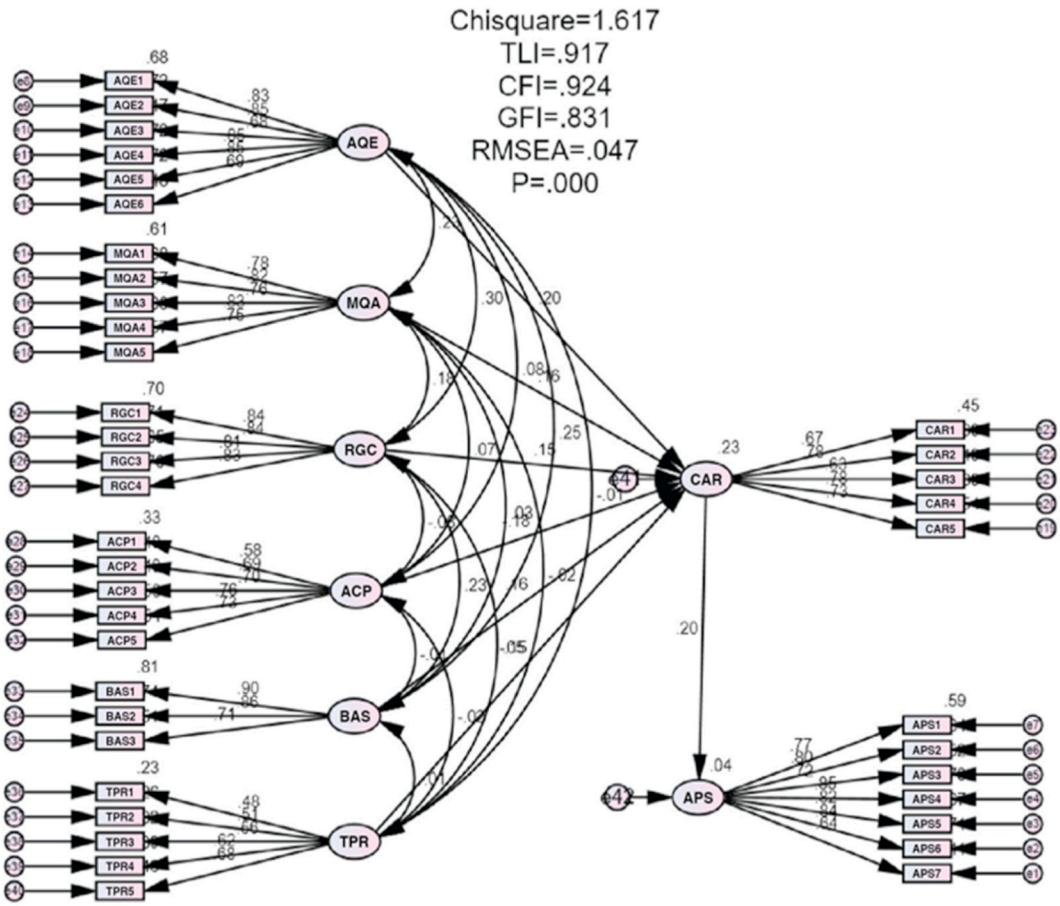

Fig. 5. SEM model results.

Table 6
Results of inspection of cause and effect relationships between concepts in the theoretical model (unstandardised).

Correlated			Covenant amount	S.E.	C.R.	*P*-value
CAR	<—	AQE	0.164	0.058	2.842	0.004
CAR	<—	MQA	0.124	0.052	2.397	0.017
CAR	<—	RGC	0.103	0.046	2.227	0.026
CAR	<—	ACP	−0.23	0.088	−2.604	0.009
CAR	<—	BAS	0.108	0.045	2.384	0.017
CAR	<—	TPR	−0.272	0.131	−2.081	0.037
APS	<—	CAR	0.217	0.058	2.842	0.004

Note: SE = SQRT(1-r2)/(n-2); CR = (1-r)/SE, *P*-value = TDIST(CR,n-2,2); n-number of degrees of freedom in the model.

Table 7
Test of theoretical model estimation by Bootstrap with N = 1000.

Parameter			SE	SE−SE	Mean	Bias	SE-Bias	CR
CAR	<—	AQE	0.073	0.002	0.193	−0.003	0.002	−1.5
CAR	<—	MQA	0.059	0.001	0.156	−0.001	0.002	−0.5
CAR	<—	RGC	0.07	0.002	0.154	0.001	0.002	0.5
CAR	<—	ACP	0.09	0.002	−0.176	0	0.003	0
CAR	<—	BAS	0.072	0.002	0.16	0.002	0.002	1
CAR	<—	TPR	0.078	0.002	−0.154	−0.004	0.002	−2
APS	<—	CAR	0.093	0.002	0.197	−0.004	0.003	−1.3

Table 8
Results of examination of research hypotheses.

Hypothesis	Variable	Expectations	Unstandarlised	Statistically Significant ($P < 0.05$)	Conclude
H_1	AQE	Positive impact on CAR	0.164	P = 0.164	Positive impact on APS
H_2	RGC	Positive impact on CAR	0.103	P = 0.103	Positive impact on APS
H_3	TPR	Negative impact on CAR	−0.272	P = −0.272	Positive impact on APS
H_4	MQA	Positive impact on CAR	0.124	P = 0.124	Positive impact on APS
H_5	ACP	Negative impact on CAR	−0.23	P = −0.23	Positive impact on APS
H_6	BAS	Positive impact on CAR	0.108	P = 0.108	Positive impact on APS
H_7	SIZ	Positive impact on CAR	0.24		Positive impact on APS
H_8	AUT	Positive impact on CAR	0.22		Positive impact on APS
H_9	CAR	Positive impact on APS	0.217	P = 0.017	Positive impact on APS

The research results also recognize that accountants' professional qualifications and experience are the factors that have the most decisive influence on compliance with accounting regulations in the application of IFRS in Vietnam. This result is entirely consistent with previous studies on the impact of accounting expertise and experience on the adoption of IFRS [24,77,84,86,87,118]. The actual survey results at enterprises also show that if the accounting staff is thoroughly trained and fostered in accounting and tax knowledge and accumulated experience from practice, they will clearly understand the nature of the economic transactions, thus making it easier to apply IFRS.

The qualifications and awareness of managers are also factors that directly, powerfully and positively affect compliance with accounting regulations and, therefore, indirectly affect the adoption of IFRS. This result is consistent with the research results of [87, 107], and [89] but contrasts with the research results of [30,36,92].

Vietnamese enterprises are under heavy pressure from tax authorities in the presentation of tax information of their units and also pressure from frequent changes in tax policies related to accounting work. Tax pressure is a factor that has a direct, negative relationship and substantially impacts compliance with accounting regulations and, therefore, significantly affects the adoption of IFRS. This conclusion is consistent with [89] study results but different from the effects of [30].

In addition, accountants' psychology has a direct negative effect on CAR and therefore has an indirect negative relationship with APS. After all, the psychology of accountants in Vietnamese enterprises largely stems from the fear of the profession not meeting the requirements of IFRS. Therefore, accountants objected to the application of IFRS by citing arguments related to the application of IFRS, such as the application of IFRS leading to the processing, recognition and presentation of information being too tricky, complicated, time-consuming and labour-intensive, and inefficient. This has had a significant limited impact on IFRS adoption. This finding is consistent with the psychological theory of [58] and related studies of the psychology of [94,95].

The remaining factors, such as enterprise size, audit performance, accounting regimes and circulars, and benefits of applying IFRS, directly and positively affect compliance with accounting regulations and, thus, have an indirect, positive impact on adopting IFRS. The importance of these factors has been confirmed in the relevant contents of the study.

6. Conclusions

There is no denying the benefits that the application of IFRS brings and the trend of applying IFRS globally. The pressure to apply IFRS is increasing every day, forcing the Government and Vietnamese businesses to want to develop sustainably, increase opportunities to attract investment capital, and access the world's high level of development; it is necessary to quickly apply IFRS to provide reliable, honest and valuable financial information.

This study has shown that adopting IFRS in Vietnam is influenced by various factors, including internal factors (such as CAR, AQE, MQA, SIZ, and ACP) and external factors (such as RGC, TPR, BAS, and AUT). To achieve the research purpose, we conduct qualitative research (with the advice of experts) and quantitative research (using Cronbach's Alpha testing tools, EFA, and CFA on the AMOS platform). Research data is surveyed from 286 enterprises in Vietnam of different sizes, including those that have/have not audited their financial statements. Research results have demonstrated that the factors that have a direct or indirect positive impact on the application of IFRS include Complying with Accounting Regulations, Accounting Qualifications and Experience, Manager's Qualifications and Awareness, Benefits of Adopting IFRS, Accounting Regime and Guiding Circulars, Firm Size, Performance of Audit Activity and 02 factors have an indirect negative relationship to the application of IFRS are Tax Pressure and Psychology of Accountants. Although there are several published studies on the application of IFRS, most have only stopped at qualitative, application-oriented, or quantitative research by the EFA method. Most of these published studies are conducted in developed economies, but in emerging economies like Vietnam, there are very few studies related to the application of IFRS. Our study was conducted to explore a theoretical research model on factors affecting the adoption of IFRS in emerging countries, of which Vietnam is an example. At the same time, measuring the degree of influence of these factors is to help policymakers and business managers realize the importance of each element so that they can have appropriate solutions to apply IFRS in all types of different businesses successfully.

The results of this study urge the Vietnamese State to complete soon and issue legal documents related to the application of IFRS and other necessary sanctions by international practices to apply IFRS successfully. For tax officers, in the process of working, it is not necessary to impose but to clearly distinguish between accounting and tax, to avoid imposing all tax policies in handling accounting data. The research results also show that businesses in Vietnam not only improve the qualifications and awareness of managers but also have to train and retrain the accounting staff. Accountants must have sufficient professional capacity, professional skills and soft skills

in handling, recording and presenting accounting information and must have a strong mentality and dare to accept change.

Ignoring the limitations of sample size, sample selection and sampling and research methods, our study has contributed to summarizing previous studies on determining factors affecting the application of IFRS - a new issue with many problems and controversies in Vietnam. We also firmly believe that our research results have contributed to the knowledge base of studies on the factors promoting/delaying the adoption of IFRS in enterprises in emerging economies. We hope that our research is one of the initial studies as a premise for other future studies associated with expanding the sample size and survey subjects beyond the limit of one nation. That research sample focuses not only on enterprises that are required to apply IFRS but also on enterprises that voluntarily apply IFRS and other enterprises' sample size and survey subjects beyond the limit of one nation.

Variable	Symbol	Corrected Item-Total Correlation	Cronbach's Alpha if Item Deleted
"APS". Alpha = 0.913			
IFRS presents the financial statements	APS1	0.601	0.914
Financial statements help users know the accounting policies and regimes applied by enterprises	APS2	0.809	0.892
Financial statements help users predict future cash flows	APS3	0.770	0.896
Financial statements reflect the financial position and business results of the enterprise	APS4	0.805	0.892
The financial statements present a true and fair view of the financial position, business results and cash flows of the enterprise	APS5	0.687	0.905
Enterprises fully present information related to IFRS on financial statements	APS6	0.755	0.898
Enterprises provide information on transparent and objective financial statements	APS7	0.730	0.900
"CAR". Alpha = 0842			
Enterprises comply with the provisions of the Law on Accounting	CAR1	0.656	0.808
Enterprises comply with the provisions of the accounting decree	CAR2	0.691	0.798
Enterprises comply with the provisions of the Accounting System	CAR3	0.584	0.827
Enterprises always comply with IFRS regulations	CAR4	0.689	0.799
Enterprises comply with the guiding circulars of IFRS	CAR5	0.620	0.818
"AQE". Alpha = 0.907			
The accountant's qualifications meet the application for IFRS	AQE1	0.796	0.883
The accountant's experience makes applying for IFRS easy	AQE2	0.805	0.881
Accountants can understand and apply IFRS in practice	AQE3	0.639	0.907
Accountants understand the nature of the business operations of the unit	AQE4	0.805	0.881
Accountants are trained and fostered in accounting and tax knowledge	AQE5	0.794	0.883
Accountants understand the process and characteristics of production and business of the unit	AQE6	0.634	0.905
"RGC". Alpha = 0.899			
The accounting Regime helps businesses fully reflect the information they need to provide	RGC1	0.782	0.866
Timely issuance of accounting circulars makes the application of IFRS more convenient and easier	RGC2	0.783	0.866
Accounting circulars help accountants better understand the content of IFRS	RGC3	0.757	0.876
The accounting circular detailing IFRS helps to ensure that the information on the financial statements is truthful and reasonable	RGC4	0.777	0.868
"TPR". Alpha = 0.673			
Prioritise the application of tax regulations in accounting to facilitate tax declaration and finalisation	TPR1	0.394	0.635
Enterprises must correct accounting data at the request of tax authorities	TPR2	0.435	0.620
Tax authorities often put pressure on the processing and presentation of accounting information in the unit	TPR3	0.442	0.618
Enterprises avoid applying IFRS and IFRS guiding circulars due to pressure from tax authorities	TPR4	0.489	0.605
Enterprises often avoid the application of accounting regimes due to pressure from tax subjectivity	TPR5	0.499	0.604
The capacity of tax officers does not meet the requirements of the job	TPR6	0.207	0.702
"MQA". Alpha = 0.890			
Managers understand the importance of applying IFRS	MQA1	0.723	0.868
Managers with knowledge in the field of accounting	MQA2	0.764	0.859
Managers are often interested in the organisation and operation of accounting work at the unit	MQA3	0.707	0.872
Managers support accounting staff to participate in training and refresher courses related to IFRS	MQA4	0.769	0.858
Managers plan, conduct training and continuous retraining for employees and managers	MQA5	0.702	0.874
"ACP". Alpha = 0.818			
Accountants think that the way to process, record and present information according to IFRS is too complicated	ACP1	0.517	0.808
Accountants are afraid to use IFRS inefficiently	ACP2	0.619	0.783
Accountants are afraid to take time to process transactions according to the nature of arising	ACP3	0.625	0.779
The application of IFRS needs to be considered in the relationship between costs and benefits	ACP4	0.670	0.768
Handling the nature of the rising business takes time and effort	ACP5	0.639	0.774
"BAS". Alpha = 0.862			

(*continued on next page*)

(*continued*)

Variable	Symbol	Corrected Item-Total Correlation	Cronbach's Alpha if Item Deleted
Financial statement information is honest, reasonable, complete, transparent, accurate and highly reliable	BAS1	0.777	0.773
Create trust for those who need to use the information to make decisions	BAS2	0.772	0.776
Users of financial statements information make decisions that are appropriate for their purposes	BAS3	0.672	0.870

Author contribution statement

Hien Thi Thu Nguyen: Conceived and designed the experiments; Performed the experiments; Contributed reagents, materials, analysis tools or data. Hoan Thi Thu Nguyen: Performed the experiments; Analyzed and interpreted the data; Wrote the paper. Cong Van Nguyen: Conceived and designed the experiments; Analyzed and interpreted the data; Wrote the paper.

Data availability statement

Data included in article/supplementary material/referenced in article.

Funding statement

This research received no external funding.

Declaration of competing interest

The authors declare that they have no known competing financial interests or personal relationships that could have appeared to influence the work reported in this paper.

Appendix A. Supplementary data

https://doi.org/10.1016/j.heliyon.2023.e17331Supplementary data related to this article can be found athttps://doi.org/10.1016/jheliyon.2023.17331.

References

[1] R. Ball, IFRS – 10 years later, Account. Bus. Res. 46 (5) (Jul. 2016) 545–571.
[2] D. Abad, M.F. Cutillas-Gomariz, J.P. Sánchez-Ballesta, J. Yagüe, Does IFRS mandatory adoption affect information asymmetry in the stock market? Aust. Account. Rev. 28 (1) (2018) 61–78.
[3] Q.H. Le, M.H. Quach, H.L. Tran, Credit composition and income inequality in Vietnam: an empirical analysis, J. Econ. Dev. 24 (4) (Nov. 2022) 365–377.
[4] IFRS Foundation, Use of IFRS Standards Around the World, IFRS Foundation, 2018. https://www.ifrs.org/content/dam/ifrs/around-the-world/adoption/use-of-ifrs-around-the-world-overview-sept-2018.pdf. accessed Dec. 21, 2020.
[5] K. Mhedhbi, D. Zeghal, Adoption of international accounting standards and performance of emerging capital markets, Rev. Account. Finance 15 (2) (2016) 252–272.
[6] D.N.P. Ngo, C.V. Nguyen, Does the CEO's financial and accounting expertise affect the financial reporting quality? Evidence from an emerging economy, J. Financ. Report. Account. (Apr. 2022) ahead-of-print, no. ahead-of-print. https://doi.org/10.1108/JFRA-09-2021-0301. ahead-of-print, no. ahead-of-print.
[7] M.E. Barth, W.R. Landsman, M.H. Lang, International accounting standards and accounting quality, J. Account. Res. 46 (3) (Jun. 2008) 467–498.
[8] H. Chen, Q. Tang, Y. Jiang, Z. Lin, The role of international financial reporting standards in accounting quality: evidence from the European union, J. Int. Financ. Manag. Account. 21 (3) (Aug. 2010) 220–278.
[9] H.B. Christensen, E. Lee, M. Walker, C. Zeng, Incentives or standards: what determines accounting quality changes around IFRS adoption? Eur. Account. Rev. 24 (1) (2015) 31–61.
[10] P.E. Dimitropoulos, D. Asteriou, D. Kousenidis, S. Leventis, The impact of IFRS on accounting quality: Evidence from Greec, Adv. Account. 29 (1) (2013) 108–123.
[11] J. Sun, S.F. Cahan, D. Emanuel, How would the mandatory adoption of IFRS affect the earnings quality of U.S. firms? Evidence from cross-listed firms in the U.S, Account. Horiz. 25 (4) (2011) 837–860.
[12] N. Masoud, The effects of mandatory IFRS adoption on financial analysts' forecast: evidence from Jordan, Cogent Bus. Manag. 4 (1) (2017).
[13] S. Sanabria-García, P. Garrido-Miralles, Impact of IFRS on non-cross-listed Spanish companies: financial analysts and volume of trade, Eur. Res. Manag. Bus. Econ. 26 (2) (May 2020) 78–86.
[14] K. Chalmers, G. Clinch, J.M. Godfrey, Changes in value relevance of accounting information upon ifrs adoption: evidence from Australia, Aust. J. Manag. 36 (2) (2011) 151–173.
[15] P.R. Weerathunga, C. Xiaofang, M. Nurunnabi, K.M.M.C.B. Kulathunga, R.M.N.C. Swarnapali, Do the IFRS promote corporate social responsibility reporting? Evidence from IFRS convergence in India, J. Int. Account. Audit. Taxat. 40 (2020).
[16] M.E. Barth, W.R. Landsman, M. Lang, C. Williams, Are IFRS-based and US GAAP-based accounting amounts comparable? J. Account. Econ. 54 (1) (Aug. 2012) 68–93.

[17] J. Horton, G. Serafeim, Market reaction to and valuation of IFRS reconciliation adjustments: first evidence from the UK, Rev. Account. Stud. 15 (4) (2010) 725–751.
[18] S. Li, Does mandatory adoption of international financial reporting standards in the European Union Reduce the cost of equity capital? Account. Rev. 85 (2) (2010) 607–636.
[19] M.E. Barth, W.R. Landsman, D. Young, Z. Zhuang, Relevance of differences between net income based on IFRS and domestic standards for European firms, J. Bus. Finance Account. 41 (3–4) (Apr. 2014) 297–327.
[20] H. Daske, L. Hail, C. Leuz, R. Verdi, Mandatory IFRS reporting around the world: early evidence on the economic consequences, J. Account. Res. 46 (5) (Dec. 2008) 1085–1142.
[21] Y. Mameche, A. Masood, Macroeconomic evidence on the impact of mandatory IFRS adoption on FDI in the Gulf Cooperation Council (GCC) countries, J. Account. Emerg. Econ. 11 (4) (2021) 610–631.
[22] F.A. Almaqtari, A.A. Hashed, Mohd Shamim, Impact of corporate governance mechanism on IFRS adoption: a comparative study of Saudi Arabia, Oman, and the United Arab Emirates, Heliyon 7 (1) (Jan. 2021), e05848.
[23] A.A. Ballas, C. Tzovas, An empirical investigation of Greek firms' compliance to IFRS disclosure requirements, Int. J. Manag. Financ. Account. 2 (1) (2010) 40–62.
[24] M. Wehrfritz, A. Haller, National influence on the application of IFRS: interpretations and accounting estimates by German and British accountants, Adv. Account. 30 (1) (2014) 196–208.
[25] A. Yamani, A. Almasarwah, Resistive factors of delaying IFRS adoption in Saudi Arabia listed firms, J. Financ. Report. Account. 17 (3) (2019) 468–497.
[26] F. Zehri, J. Chouaibi, Adoption determinants of the international accounting standards IAS/IFRS by the developing countries, Journal of Economics Finance and Administrative Science 18 (35) (Dec. 2013) 56–62.
[27] O. Riahi, W. Khoufi, Understanding IFRS adoption: consideration of the institutional dimension through a behavioral context, J. Appl. Account. Res. 20 (4) (2019) 543–570.
[28] N. Tsunogaya, Issues affecting decisions on mandatory adoption of international financial reporting standards (IFRS) in Japan, Account Audit. Account. J. 29 (5) (2016) 828–860.
[29] M.H. Sharairi, Factors that influenced the adoption of IFRS by Islamic banks in the UAE, Account. Res. J. 33 (1) (2020) 75–91.
[30] A. Bonito, C. Pais, The macroeconomic determinants of the adoption of IFRS for SMEs, Rev. Contab. - Spanish Accounting Rev. 21 (2) (2018) 116–127.
[31] D. Kaya, M. Koch, Countries' adoption of the international financial reporting standard for small and medium-sized entities (IFRS for SMEs) – early empirical evidence, Account. Bus. Res. 45 (1) (Jan. 2015) 93–120.
[32] S. Damak-Ayadi, N. Sassi, M. Bahri, Cross-country determinants of IFRS for SMEs adoption, J. Financ. Report. Account. 18 (1) (2020) 147–168.
[33] Minister of Finance, "Decision approving scheme for application of financial reporting standards in Vietnam," Mar. 2020. Accessed: Aug. 18, 2022. [Online]. Available: https://thuvienphapluat.vn/van-ban/Tai-chinh-nha-nuoc/Decision-345-QD-BTC-2020-scheme-for-application-for-financial-reporting-standards-in-Vietnam-438513.aspx?tab=1.
[34] T.L.H. Nguyen, T.H. Phuong Le, N.M. Dao, N.T. Pham, Factors affecting enterprises that apply the international financial report standards (IFRS): a case study in Vietnam, J. Asian Finance Econ. Bus. 7 (12) (Dec. 2020) 409–421.
[35] T.C.T. Tran, X.T. Ha, T.H.P. Le, N.T. Nguyen, Factors affecting IFRS adoption in listed companies: evidence from Vietnam, Manag. Sci. Lett. 9 (2019) 2169–2180. Special Issue 13.
[36] D.T. Doan, L.N.T. Nguyen, H.T. Phan, Factors affecting the application of IFRS through the perceptions of business managers and auditors in Vietnam, Probl. Perspect. Manag. 18 (1) (2020) 371–384.
[37] D. Phan, M. Joshi, B. Mascitelli, What influences the willingness of Vietnamese accountants to adopt International Financial Reporting Standards (IFRS) by 2025? Asian Rev. Account. 26 (2) (2018) 225–247.
[38] H.C. Nguyen, The possibilities of adopting IAS/IFRS in Vietnam: an analysis, Corp. Ownersh. Control 9 (1) (2011) 161–171. Accessed: Aug. 18, 2022. [Online]. Available:.
[39] N.T. Bui, O.T.T. Le, H.M. Dao, Estimation of benefits and difficulties when applying IFRS in Vietnam: from business perspective, Int. J. Financ. Res. 11 (4) (Jul. 2020) 165–179.
[40] L. Nguyen, A. Rahman, From totalitarianism to capitalism – the case of IFRS adoption in Vietnam, Account. Finance 59 (3) (Sep. 2019) 1649–1680.
[41] R.L. Watts, J.L. Zimmerman, Positive accounting theory: a ten year perspective, Account. Rev. 65 (1) (1990) 131–156 [Online]. Available: http://www.jstor.org/stable/247880.
[42] L.A. Eiler, J. Miranda-Lopez, I. Tama-Sweet, The impact of IFRS on earnings management: evidence from Mexico, J. Account. Emerg. Econ. 12 (1) (Jan. 2022) 77–96.
[43] I.S. Osinubi, The three pillars of institutional theory and IFRS implementation in Nigeria, J. Account. Emerg. Econ. 10 (4) (Oct. 13, 2020) 575–599. Emerald Group Holdings Ltd.
[44] K. Samaha, H. Khlif, Adoption of and compliance with IFRS in developing countries: a synthesis of theories and directions for future research, J. Account. Emerg. Econ. 6 (1) (Feb. 2016) 33–49.
[45] D. Aburous, IFRS and institutional work in the accounting domain, Crit. Perspect. Account. 62 (2019) 1–15.
[46] M.C. Jensen, W.H. Meckling, Theory of the firm: managerial behavior, agency costs and ownership structure, J. Financ. Econ. 3 (4) (Oct. 1976) 305–360.
[47] T.B. Bell, J.v. Carcello, A decision aid for assessing the likelihood of fraudulent financial reporting, Audit J. Pract. Theor. 19 (1) (2000) 168–184. Accessed: Aug. 24, 2022. [Online]. Available:.
[48] R. Leftwich, Market failure fallacies and accounting information, J. Account. Econ. 2 (3) (1980) 193–211.
[49] A. Hallberg, S. Persson, Voluntary Application of IFRS: A Study of Factors and Explanations within the Swedish Unregulated Capital Markets, Lap Lambert Academic Publishing, Chisinau-2068, 2012.
[50] J.R. Francis, I.K. Khurana, X. Martin, R. Pereira, The role of firm-specific incentives and country factors in explaining voluntary IAS adoptions: evidence from private firms, Eur. Account. Rev. 17 (2) (Jul. 2008) 331–360.
[51] M. Al-Akra, I.A. Eddie, M.J. Ali, The influence of the introduction of accounting disclosure regulation on mandatory disclosure compliance: evidence from Jordan, Br. Account. Rev. 42 (3) (Sep. 2010) 170–186.
[52] K. Hlel, I. Kahloul, H. Bouzgarrou, IFRS adoption, corporate governance and management earnings forecasts, J. Financ. Report. Account. 18 (2) (2020) 325–342.
[53] G.J. Staubus, The Decision-Usefulness Theory of Accounting: A Limited History, Garland Publishing, Inc, New York, NY, 1999.
[54] R.R. Sterling, On theory construction and verification, Account. Rev. 45 (3) (1970) 444–457.
[55] S. Cohen, S. Karatzimas, Accounting information quality and decision-usefulness of governmental financial reporting: moving from cash to modified cash, Meditari Account. Res. 25 (1) (2017) 95–113.
[56] A.M. Mosadeghrad, Factors affecting medical service quality, Iran. J. Public Health 43 (2) (2014) 210–220. Accessed: Aug. 24, 2022. [Online]. Available: https://www.ncbi.nlm.nih.gov/pmc/articles/PMC4450689/.
[57] K.E. Weick, Theory construction as disciplined imagination, Acad. Manag. Rev. 14 (4) (1989) 516–531.
[58] C. Argyris, Human problems with budgets, Harv. Bus. Rev. 31 (1) (1953) 97–110.
[59] J.G. Birnberg, J. Luft, M.D. Shields, Psychology theory in management accounting research, in: C.S. Chapman, A.G. Hopwood, M.D. Shields (Eds.), Handbooks of Management Accounting Research, Elsevier, 2006, pp. 113–135.
[60] A.C. Stedry, Budget control and cost behavior, in: Doctoral Dissertation Series, Prentice-Hall, 1960 [Online]. Available: https://books.google.com.vn/books?id=tJfRAAAAMAAJ.
[61] A.G. Hopwood, An empirical study of the role of accounting data in performance evaluation, J. Account. Res. 10 (1972) 156–182.
[62] G.H. Hofstede, The Game of Budget Control, twentieth ed., Routledge, London, 1968.

[63] J. Luft, M.D. Shields, Psychology models of management accounting, Foundations and Trends in Accounting 4 (3–4) (2010) 199–345.
[64] K. Milani, The relationship of participation in budget-setting to industrial supervisor performance and attitudes: a field study, Account. Rev. 50 (2) (1975) 274–284.
[65] M. Hall, Realising the richness of psychology theory in contingency-based management accounting research, Manag. Account. Res. 31 (2016) 63–74.
[66] J. Eljammi Ayadi, S. Damak, K. Hussainey, The impact of conservatism and secrecy on the IFRS interpretation: the case of Tunisia and Egypt, J. Financ. Report. Account. 19 (2) (May 2021) 234–271.
[67] R.L. Watts, J.L. Zimmerman, Towards a positive theory of the determination of accounting standards, Account. Rev. 53 (1) (1978) 112–134.
[68] M. Gaffikin, Accounting research and theory: the age of neo-empiricism, Australasian Accounting, Business and Finance Journal 1 (1) (2007) 1–17.
[69] D. Craig Nichols, J.M. Wahlen, How do earnings numbers relate to stock returns? A review of classic accounting research with updated evidence, Account. Horiz. 18 (4) (2004) 263–286.
[70] S.T.A. Nasution, R.F. Putri, I. Muda, S. Ginting, Positive accounting theory: theoretical perspectives on accounting policy choice, in: Proceedings of the 1st Unimed International Conference on Economics Education and Social Science, SCITEPRESS - Science and Technology Publications, 2018, pp. 1128–1133.
[71] P.J. DiMaggio, W.W. Powell, The iron cage revisited: institutional isomorphism and collective rationality in organizational fields, Am. Socio. Rev. 48 (2) (Apr. 1983) 147.
[72] R. Abaidoo, E.K. Agyapong, Financial development and institutional quality among emerging economies, J. Econ. Dev. 24 (3) (Aug. 2022) 198–216.
[73] P.S. Yeow, N. Mahzan, The responses of Malaysian public listed companies to the IFRS convergence, Asian J. Bus. Account. 6 (1) (2013) 2013. Accessed: Aug. 19, 2022. [Online]. Available: https://ajba.um.edu.my/index.php/AJBA/article/view/2670/871.
[74] M.Z. Mir, A.S. Rahaman, The adoption of international accounting standards in Bangladesh: an exploration of rationale and process, Account Audit. Account. J. 18 (6) (2005) 816–841.
[75] M.M. Bengtsson, Determinants of de jure adoption of international financial reporting standards: a review, Pac. Account. Rev. 34 (1) (Oct. 2021) 156–173.
[76] M. Bassemir, Why do private firms adopt IFRS? Account. Bus. Res. 48 (3) (2018) 237–263.
[77] P. Lal Joshi, S. Ramadhan, The adoption of international accounting standards by small and closely held companies: evidence from Bahrain, Int. J. Account. 37 (4) (2002) 429–440.
[78] S. Kim, N. Kim, K.-M. Kwon, Mandatory IFRS adoption and financial analysts' information environment: evidence from Korean market, J. Appl. Bus. Res. 32 (5) (2016) 1387–1404. Accessed: Aug. 18, 2022. [Online]. Available:.
[79] A. Takacs, T. Szucs, D. Kehl, A. Fodor, The effect of fair valuation on banks' earnings quality: empirical evidence from developed and emerging European countries, Heliyon 6 (12) (Dec. 2020), e05659.
[80] A. Habib, M.B.U. Bhuiyan, M.M. Hasan, IFRS adoption, financial reporting quality and cost of capital: a life cycle perspective, Pac. Account. Rev. 31 (3) (Oct. 2019) 497–522.
[81] M. Paananen, H. Lin, The development of accounting quality of IAS and IFRS over time: the case of Germany, Journal of International accounting research 8 (1) (2009) 31–55.
[82] A.S. Ahmed, M.J. Neel, D. Wang, Does mandatory adoption of international financial reporting standards improve accounting quality? Preliminary evidence, Contemp. Account. Res. 30 (4) (2013) 1344–1372.
[83] M. Bryce, M.J. Ali, P.R. Mather, Accounting quality in the pre-/post-IFRS adoption periods and the impact on audit committee effectiveness – evidence from Australia, Pac. Basin Finance J. 35 (2015) 163–181.
[84] K.M. Shima, D.C. Yang, Factors affecting the adoption of IFRS, Int. J. Bus. 17 (3) (2012) 276–298. Accessed: Aug. 19, 2022. [Online]. Available: chrome-extension://efaidnbmnnnibpcajpcglclefindmkaj/http://www.craig.csufresno.edu/IJB/Volumes/Volume%2017/V173-4.pdf.
[85] T.T. Nguyen, C.V. Nguyen, The relationship between environmental disclosure and influencing factors in an emerging market: evidence from Vietnamese enterprises, Int. J. Bus. Excel. (Mar. 2022) vol. in press, no. in press, p. in press-in press.
[86] D. Zeghal, K. Mhedhbi, An analysis of the factors affecting the adoption of international accounting standards by developing countries, Int. J. Account. 41 (4) (2006) 373–386.
[87] A. Ebrahim, T.A. Fattah, Corporate governance and initial compliance with IFRS in emerging markets: the case of income tax accounting in Egypt, J. Int. Account. Audit. Taxat. 24 (2015) 46–60.
[88] M. Hung, K.R. Subramanyam, Financial statement effects of adopting international accounting standards: the case of Germany, Rev. Account. Stud. 12 (4) (2007) 623–657.
[89] Y.M. Sellami, Y. Gafsi, What drives developing and transitional countries to adopt the IFRS for SMEs? An institutional perspective, J. Corp. Account. Finance 29 (2) (Apr. 2018) 34–56.
[90] T. Zeng, Country-level governance, accounting standards, and tax avoidance: a cross-country study, Asian Rev. Account. 27 (3) (2019) 401–424.
[91] R.N. Braga, Effects of IFRS adoption on tax avoidance, Revista Contabilidade e Financas 28 (75) (Sep. 2017) 407–424.
[92] A. Kouaib, A. Jarboui, The mediating effect of REM on the relationship between CEO overconfidence and subsequent firm performance moderated by IFRS adoption: a moderated-mediation analysis, Res. Int. Bus. Finance 42 (2017) 338–352.
[93] P.C. James, An analysis of the factors influencing the adoption of activity based costing (ABC) in the financial sector in Jamaica, Int. J. Bus. Soc. Res. 3 (7) (2013) 8–18.
[94] T. Malmi, Towards explaining activity-based costing failure: accounting and control in a decentralized organization, Manag. Account. Res. 8 (4) (Dec. 1997) 459–480.
[95] A.M. Moisello, ABC: evolution, problems of implementation and organizational variables, Am. J. Ind. Bus. Manag. 2 (2) (2012) 55–63.
[96] H.T.T. Nguyen, Factors Affecting the Application of Accounting Standards – Research on Corporate Income Tax Accounting Standards in Vietnam," Thesis of Doctorate in Economics, University Of Economics Ho Chi Minh City, Hochiminh, Vietnam, 2018.
[97] S.H. Uzma, Cost-benefit analysis of IFRS adoption: developed and emerging countries, J. Financ. Report. Account. 14 (2) (Oct. 2016) 198–229.
[98] E.R. Outa, The impact of international financial reporting standards (IFRS) adoption on the accounting quality of listed companies in Kenya, Int. J. Account. Financ. Report. 1 (1) (2011) 212.
[99] R. Neag, E. Maşca, I. Păşcan, Research on the field tests in Mures county Romania regarding the opportunity for different accounting requirements for "small entities or "micro-entities, Int. J. Account. Inf. Manag. 19 (2) (Jun. 2011) 305–328.
[100] H. Affes, A. Callimaci, The determinants of the early adoption of international accounting standards: financial decision or opportunism? Accounting Auditing Control 13 (2) (May 2007) 149–166.
[101] S. Carmona, M. Trombetta, On the global acceptance of IAS/IFRS accounting standards: the logic and implications of the principles-based system, J. Account. Publ. Pol. 27 (6) (2008) 455–461.
[102] A. Alnaas, A. Rashid, Firm characteristics and compliance with IAS/IFRS: evidence from north african companies, J. Financ. Report. Account. 17 (3) (2019) 383–410.
[103] K.O. Appiah, D. Awunyo-Vitor, K. Mireku, C. Ahiagbah, Compliance with international financial reporting standards: the case of listed firms in Ghana, J. Financ. Report. Account. 14 (1) (2016) 131–156.
[104] S. Erdem, E. Aslanertik, B. Yardimci, The main determinants of differences in compliance levels of disclosure items for IAS 16 in BIST, J. Financ. Report. Account. 15 (3) (Oct. 2017) 317–332.
[105] E.M. Yiadom, W. Atsunyo, Compliance with international financial reporting standards by listed companies in Ghana, Int. J. Bus. Manag. 9 (10) (Sep. 2014).
[106] M. Glaum, P. Schmidt, D.L. Street, S. Vogel, Compliance with IFRS 3-and IAS 36-required disclosures across 17 European countries: company-and country-level determinants, Account. Bus. Res. 43 (3) (Jun. 2013) 163–204.
[107] M.J. Page, Corporate financial reporting and the small independent company, Account. Bus. Res. 14 (55) (Jun. 1984) 271–282.
[108] J.C. Bedard, K.M. Johnstone, Earnings manipulation risk, corporate governance risk, and auditors' planning and pricing decisions, Account. Rev. 79 (2) (2004) 277–304.

[109] M.D. Tran, K.F. Khairi, N.H. Laili, A longitudinal study of audit quality differences among independent auditors, J. Econ. Dev. 21 (2) (Oct. 2019) 234–246.
[110] İ.U. Mısırlıoğlu, J. Tucker, O. Yükseltürk, Does mandatory adoption of IFRS guarantee compliance? Int. J. Account. 48 (3) (2013) 327–363.
[111] V. Tawiah, P. Boolaky, Determinants of IFRS compliance in Africa: analysis of stakeholder attributes, Int. J. Account. Inf. Manag. 27 (4) (2019) 573–599.
[112] W.R. Scott, Institutional theory, in: G. Ritzer (Ed.), Encyclopedia of Social Theory, Sage Publications, Inc, Thousand Oaks, CA, 2005, pp. 408–414.
[113] W.R. Scott, Institutions and Organizations: Ideas, Interests and Identities, fourth ed., Sage, Los Angeles, CA, 2014.
[114] C. Marquis, A. Tilcsik, Institutional equivalence: how industry and community peers influence corporate philanthropy, Organ. Sci. 27 (5) (Oct. 2016) 1325–1341.
[115] I. Ajzen, The theory of planned behavior, Organ. Behav. Hum. Decis. Process. 50 (2) (1991) 179–211.
[116] I. Ajzen, The theory of planned behaviour: reactions and reflections, Psychol. Health 26 (9) (2011) 1113–1127.
[117] I. Tsalavoutas, Transition to IFRS and compliance with mandatory disclosure requirements: what is the signal? Adv. Account. 27 (2) (2011) 390–405.
[118] H.T. Nguyen, Factors affecting the application of international financial reporting standards (IFRS): a case study in Vietnam, J. Econ. Dev. 271 (II) (Jan. 2020) 113–124.