THE JOURNAL OF
Obstetrics and Gynaecology Research

doi:10.1111/jog.14089 J. Obstet. Gynaecol. Res. Vol. 45, No. 11: 2280–2283, November 2019

Novel solute carrier family 26, member 3 mutation in a prenatal recurrent case with congenital chloride diarrhea

Siqi Wu[1,2], Jin Han[1,2,3], Yongling Zhang[3], Zhichao Ye[1], Ping Lu[1] and Kege Tian[1]

[1]*Department of Prenatal Diagnosis, Dongguan Kanghua Hospital, Dongguan,* [2]*Department of Obstetrics and Gynecology, Guangzhou Medical University and* [3]*Department of Prenatal diagnosis, Guangzhou Women and Children's Medical Center, Guangzhou, China*

Abstract

Congenital chloride diarrhea (CCD) is an autosomal recessive hereditary disease manifested by persistent, watery, profuse diarrhea with high chloride concentration (>90 mmol/L). Postnatally, neonates suffer from hypochloremia, hyponatremia, hypokalemia, metabolic alkalosis, dehydration, developmental retardation, or even death. Prenatal diagnosis is of great importance for the prognosis of CCD. We report a prenatal recurrent case of CCD. Prenatal ultrasound revealed fetal diffuse intestinal dilation with the typical honeycomb sign and polyhydramnios with high amniotic fluid index. The whole exome capture and massively-parallel DNA sequencing showed an abnormal mutation of Solute Carrier Family 26, Member 3 (SLC26A3), c.1039G>A (p.Ala347Thr), and the mutation sites were verified by sanger sequencing. When prenatal ultrasound shows polyhydramnios and diffuse intestinal dilation, CCD should be suspected. Molecular genetic testing can be helpful for the diagnosis.

Key words: congenital chloride diarrhea (CCD), prenatal diagnosis, Solute Carrier Family 26, Member 3 (SLC26A3).

Introduction

Congenital chloride diarrhea (CCD, mendelian inheritance in man [MIM] #214700), which was first described by Gamble *et al*. and Darrow *et al*. in 1945 as 'congenital alkalosis with diarrhea', is an autosomal recessive hereditary disease[1] manifested by persistent, watery, profuse diarrhea with high chloride concentration (>90 mmol/L).[2] Prenatal ultrasound reveals polyhydramnios caused by intrauterine diarrhea and intestinal dilation that may be difficult to distinguish from congenital intestinal obstruction.[3] Because of the persistent chloride diarrhea, neonatal serum electrolyte examination reveals hypochloremia, hyponatremia, and hypokalemia. Children with this disease are vulnerable to severe metabolic alkalosis, dehydration, developmental retardation, or even death.[2,4] Solute Carrier Family 26, Member 3 (SLC26A3, MIM #126650), encoding an epithelial Na+-independent Cl-/HCO_3- exchanger and mainly expressed in the brush border of the duodenal, ileal, and colonic epithelia,[5,6] its mutations believed to be responsible for CCD.[7,8] Whole exome capture and massively-parallel DNA sequencing have important practical significance in the detection of mutated genes, which are widely used in clinic.[9] We report a prenatal recurrent case of congenital chloride diarrhea caused by novel SLC26A3 mutation.

Case Report

The patient, was a 28-year-old east Asian women, gravida 2, para 1. She had neither bad habits nor

Received: January 24 2019.
Accepted: July 20 2019.
Correspondence: Dr. Jin Han, Prenatal Diagnosis Center, Guangzhou Women and children's Medical Center, Jin Sui Road, 4th Floor, Zhu Jiang New Area, Guangzhou, Guangdong, The people's Republic of China 510623. Email: hanjin1123@163.com
Siqi Wu and Jin Han are joint first authors.

 © 2019 The Authors. Journal of Obstetrics and Gynaecology Research published by John Wiley & Sons Australia, Ltd on behalf of Japan Society of Obstetrics and Gynecology
This is an open access article under the terms of the Creative Commons Attribution-NonCommercial-NoDerivs License, which permits use and distribution in any medium, provided the original work is properly cited, the use is non-commercial and no modifications or adaptations are made.

exposure to high-risk pathogenic factors. No obvious abnormalities were demonstrated in the first trimester, but ultrasound at 25 weeks' gestation revealed polyhydramnios and sediment echo in the amniotic dark area (Fig. 1a). At 30 weeks' gestation ultrasound, fetal diffuse intestinal dilation with the honeycomb sign and polyhydramnios with an amniotic fluid index (AFI) of 28 cm was displayed (Fig. 1b). It was notable that free clumps of suspected feces were found in the amniotic fluid. Simultaneously, no other fetal abnormalities were mentioned. When asked about her family history, the woman's previous birth history was remarkable. Four years ago, the patient had a similar pregnancy experience with the baby's prenatal ultrasound showing extensive intestinal dilation and polyhydramnios; thus, the intestinal abnormalities were suspected at that time. Later, the pregnant woman was delivered by cesarean section due to 'premature rupture of membranes and abnormal fetal umbilical blood flow' at the 32 weeks and 4 days' gestation. The operation was successful, but the neonate suffered from persistent watery diarrhea, electrolyte disturbance, and poor feeding since birth. Finally, the baby did not survive.

Through our efforts, a specimen of umbilical cord blood of the deceased child was found in the hospital where he was born. In addition, the umbilical cord blood of the fetus and peripheral blood of parents were tested. The whole exome capture and sequencing of genomic DNA were performed with the siblings and their parents, and subsequent Sanger sequencing was performed to verify the candidate mutation sites in the DNA of family samples. Whole Exome Sequencing was performed by Illumina HiSeq 2500, all the reads were aligned to the human reference genome (hg19), the sequence depth of 95% of the target region was more than 20×. Variants analysis was performed by Clinic Sequence Analyzer (WuXi NextCODE) to find pathogenic genes associate with patients' phenotype and genetic variants with clinical meanings. Three databases ClinVar, online mendelian inheritance in man, and human gene mutation database were used to screen known pathogenic variants. Multiple software were used to predict the function of missense variants and the annotation of noncoding sequence. Population frequency database were used to eliminate variants with high frequency in normal population. Finally, the data yield for this case was 10.14Gb.The findings revealed that the two babies showed an abnormal homozygous mutation of SLC26A3 in chr7:107423730 (NM_000111.2:c.1039G>A (p.Ala347Thr)). Based on the autosomal recessive inheritance, the parents are heterozygous carriers of the variation, so their phenotypes are normal. The Pedigree of the family and sanger sequencing diagram are shown in Figure 2. According to The Genome Aggregation Database (gnomAD), the variation of c.1039G>A (p.Ala347Thr) was reported as heterozygote (the phenotype was normal) in one case. According to the population databases, homozygous mutations at this locus have not been reported, and the allele frequency was extremely low in this recessive disease. Multiple lines of computational evidence support a deleterious effect on the gene or gene product. According to 'Standards and guidelines for the interpretation of sequence variants' specified by American College of Medical Genetics and Genomics, the gene mutation locus in this case can be classified as 'likely pathogenic' (PM3 + PP1 + PM2 + PP3).[10] 'Likely

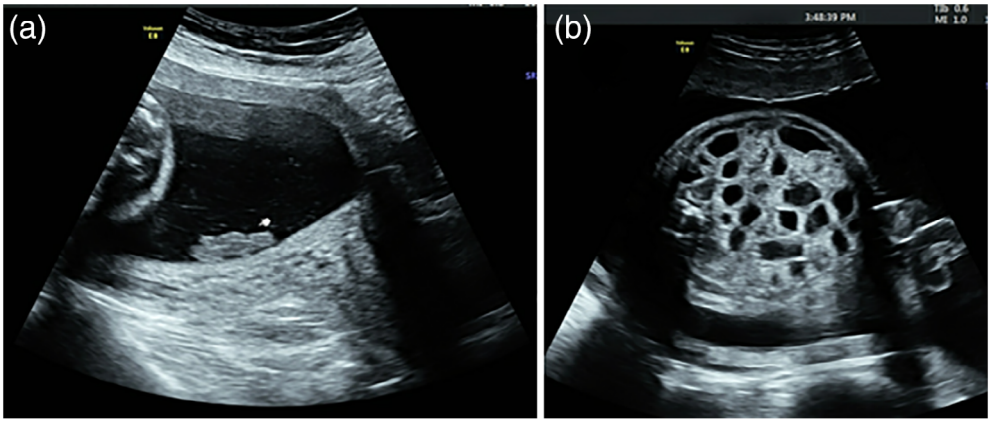

Figure 1 (a) Ultrasound at 25 weeks' gestation: polyhydramnios and sediment echo in amniotic dark area. (b) Ultrasound at 30 weeks' gestation: fetal diffuse intestinal dilation with the honeycomb sign.

© 2019 The Authors. Journal of Obstetrics and Gynaecology Research published by John Wiley & Sons Australia, Ltd on behalf of Japan Society of Obstetrics and Gynecology

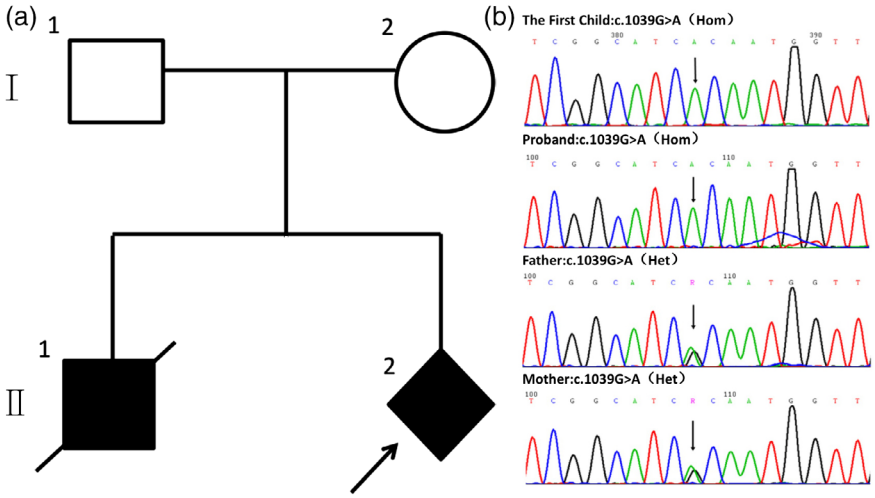

Figure 2 (a) Pedigree of the family. (b) Sequencing of SLC26A3 gene (reference cDNA sequence: NM_000111.2) revealed a homozygous variation, resulting in G to A substitution at nucleotide position 1039 (c.1039G>A; p.Ala347Thr). Both parents were heterozygous carriers of the variation. Het, heterozygous; Hom, homozygous mutation.

pathogenic' was used to mean greater than 90% certainty of a variant being disease causing. Subsequently, the couple decided to induce labor.

Discussion

Based on current research, mutation of SLC26A3 is the cause of CCD. The major types of SLC26A3 mutation are single-nucleotide substitutions. This case shows the transition changing a purine to another purine, G to A. When prenatal ultrasound reveals polyhydramnios and intestinal dilation, CCD should be suspected, but it should be identified with other intestinal diseases. In 2010, Chen *et al*. reviewed the literature of abnormal prenatal ultrasound findings associated with congenital diarrhea and found that prenatal ultrasound showing a honeycomb appearance of diffuse intestinal dilation and polyhydramnios may indicate congenital diarrhea, such as CCD, congenital sodium diarrhea, and microvillus inclusion disease. During differential diagnosis, prenatal molecular genetic testing is beneficial.[11] In 2011, Lechner *et al*. also supported the significance of molecular testing for CCD.[12] In this case report, molecular genetic testing was applied in a timely manner because of the deceased child, so an abnormal mutation of SLC26A3 in chr7:107423730 (NM_000111.2:c.1039G>A (p.Ala347Thr)) was found, and CCD was diagnosed in the prenatal period.

In addition, intestinal obstruction should be included in prenatal ultrasonographic differential diagnosis. Polyhydramnios is more obvious and appears earlier in pregnancy in CCD than in small bowel atresia. The abdomen of a fetus with CCD is filled with dilated intestines with normal peristalsis, while small bowel atresia has only a few dilated intestines with increased peristalsis.[13]

It is noteworthy that severe dehydration and electrolyte imbalance may lead to death if untreated, but early diagnosis and treatment of CCD can reduce further deterioration of the disease.[14] Prenatally, regular fetal monitoring using cardiotocography and ultrasonic testing may be benefit for some fetuses with CCD.[15] If necessary, amniocentesis may be performed to reduce polyhydramnios. Postnatally, it is important to provide immediate salt substitution therapy to newborns.

In conclusion, we diagnosed a case of prenatal recurrent CCD by typical prenatal ultrasound imaging and molecular genetic testing. Prenatal ultrasound revealed fetal diffuse intestinal dilation with the honeycomb sign and polyhydramnios with high AFI. The whole exome capture and massively-parallel DNA sequencing showed an abnormal mutation of SLC26A3, and the mutation sites were verified by sanger sequencing. Prenatal diagnosis of CCD allowed the medical team to intervene and inform the parents earlier about the condition of the fetus.

Acknowledgments

The authors would like to thank the family members for their participation and staff members at the Prenatal diagnosis center of Guangzhou Women and Children's Medical Center and Dongguan Kanghua Hospital, Guangdong Province, China, for their cooperation. The authors would also like to thank the

 © 2019 The Authors. Journal of Obstetrics and Gynaecology Research published by John Wiley & Sons Australia, Ltd on behalf of Japan Society of Obstetrics and Gynecology

Genome Aggregation Database (gnomAD) for provided genome variant data, and thank three foundations (The science and Technology Program of Guangdong (2016A020218003), The science and Technology Program of Guangzhou (201607010341), The Science and Technology Program of Dongguan (2018507150591625)) for this supports.

Disclosure

I hereby declare that all co-authors have no conflict of interest.

Author contributions

All the authors have accepted responsibility for the entire content of this submitted manuscript and approved submission.

References

1. Norio R, Perheentupa J, Launiala K, Hallman N. Congenital chloride diarrhea, an autosomal recessive disease. Genetic study of 14 Finnish and 12 other families. *Clin Genet* 1971; **2**: 182–192.
2. Davidson AG, Insley J, Capps FP, Anderson CM. Familial chloride diarrhoea (congenital alkalosis with diarrhoea). *Aust Paediatr J* 1972; **8**: 187–190.
3. Kawamura T, Nishiguchi T. Congenital chloride diarrhea (CCD): A case report of CCD suspected by prenatal ultrasonography and magnetic resonance imaging (MRI). *Am J Case Rep* 2017; **18**: 707–713.
4. Holmberg C, Perheentupa J, Launiala K, Hallman N. Colonic electrolyte transport in health and in congenital chloride diarrhea. *J Clin Invest* 1975; **56**: 302–310.
5. Moseley RH, Hoglund P, Wu GD *et al*. Downregulated in adenoma gene encodes a chloride transporter defective in congenital chloride diarrhea. *Am J Physiol* 1999; **276**: G185–G192.
6. Jacob P, Rossmann H, Lamprecht G *et al*. Down-regulated in adenoma mediates apical Cl-/HCO3- exchange in rabbit, rat, and human duodenum. *Gastroenterology* 2002; **122**: 709–724.
7. Höglund P, Haila S, Socha J *et al*. Mutations of the down regulated in adenoma DRA gene cause congenital chloride diarrhoea. *Nat Genet* 1996; **14**: 316–319.
8. Wedenoja S, Pekansaari E, Hoglund P, Makela S, Holmberg C, Kere J. Update on SLC26A3 mutations in congenital chloride diarrhea. *Hum Mutat* 2011; **32**: 715–722.
9. Choi M, Ute IS, Ji W *et al*. Genetic diagnosis by whole exome capture and massively parallel DNA sequencing. *Proc Natl Acad Sci U S A* 2009; **106**: 19096–19101.
10. Richards S, Aziz N, Bale S *et al*. Standards and guidelines for the interpretation of sequence variants: A joint consensus recommendation of the American College of Medical Genetics and Genomics and the Association for Molecular Pathology. *Genet Med* 2015; **17**: 405–424.
11. Chen CP, Chiang MC, Wang TH *et al*. Microvillus inclusion disease: Prenatal ultrasound findings, molecular diagnosis and genetic counseling of congenital diarrhea. *Taiwan J Obstet Gynecol* 2010; **49**: 487–494.
12. Lechner S, Ruemmele FM, Zankl A *et al*. Significance of molecular testing for congenital chloride diarrhea. *J Pediatr Gastroenterol Nutr* 2011; **53**: 48–54.
13. Lundkvist K, Ewald U, Lindgren PG. Congenital chloride diarrhoea: A prenatal differential diagnosis of small bowel atresia. *Acta Paediatr* 1996; **85**: 295–298.
14. Hihnala S, Hoglund P, Lammi L, Kokkonen J, Ormala T, Holmberg C. Long-term clinical outcome in patients with congenital chloride diarrhea. *J Pediatr Gastroenterol Nutr* 2006; **42**: 369–375.
15. Imada S, Kikuchi A, Horikoshi T *et al*. Prenatal diagnosis and management of congenital chloride diarrhea: A case report of 2 siblings. *J Clin Ultrasound* 2012; **40**: 239–242.

© 2019 The Authors. Journal of Obstetrics and Gynaecology Research published by John Wiley & Sons Australia, Ltd on behalf of Japan Society of Obstetrics and Gynecology