Citation: CPT Pharmacometrics Syst. Pharmacol. (2016) 5, 147–157; doi:10.1002/psp4.12065
© 2016 ASCPT All rights reserved

ORIGINAL ARTICLE

Model-Based Analysis of Unbound Lopinavir Pharmacokinetics in HIV-Infected Pregnant Women Supports Standard Dosing in the Third Trimester

J Chen[1], S Malone[1], HMA Prince[2], KB Patterson[2] and JB Dumond[1]*

Physiological changes during pregnancy can affect drug pharmacokinetics. Here we present a population pharmacokinetic model to describe the longitudinal change of unbound lopinavir/ritonavir (LPV/RTV) PK parameters with gestational age, and to predict unbound LPV concentrations under different dosing regimens. The changes in apparent intrinsic clearances of LPV and RTV during pregnancy are described using an exponential function of gestational age. The unbound fractions of LPV/RTV are not significantly different between pregnancy and postpartum. Simulation reveals that despite increases in LPV intrinsic clearance, effective LPV inhibitory quotient (IQ) values are predicted with the standard dosing (400/100 mg b.i.d.) in >90% of simulations, with ≤4-fold increase in viral IC_{50}. As viral susceptibility decreases, higher doses increase the likelihood of efficacy. With ≥40-fold increases in IC_{50}, IQs suggest alternate regimens be considered. This approach refines previous LPV PK reports, and supports that standard dosing is effective with susceptible virus.
CPT Pharmacometrics Syst. Pharmacol. (2016) **5**, 147–157; doi:10.1002/psp4.12065; published online 22 March 2016.

Study Highlights

WHAT IS THE CURRENT KNOWLEDGE ON THE TOPIC? ☑ The need for a dosage increase due to decreases in total drug concentrations of the lopinavir component of Kaletra in pregnancy has been debated in the HIV field since the early 2000s. The Food and Drug Administration recently approved a change to the Kaletra prescribing information to reflect that dosage increases are not needed in most pregnant women receiving this treatment. • WHAT QUESTION DID THIS STUDY ADDRESS? ☑ This is a secondary, model-based analysis undertaken to provide clinicians insight into when dosage adjustments may be warranted, based on the unbound pharmacokinetics of lopinavir and pharmacodynamics endpoints (inhibitory quotient at varying viral IC_{50} values). • WHAT THIS STUDY ADDS TO OUR KNOWLEDGE ☑ This analysis characterizes the longitudinal increase of the elimination of LPV and RTV during pregnancy from 20–32 weeks, and reveals the insignificant change of unbound fraction of the two drugs during and post pregnancy. This study provides recommendations for lopinavir dosing in the third trimester of pregnancy in the setting of HIV viral resistance. • HOW THIS MIGHT CHANGE CLINICAL PHARMACOLOGY AND THERAPEUTICS ☑ Modeling of unbound antiretroviral drug concentrations is rare, but is the most meaningful way of linking pharmacokinetics and pharmacodynamics of highly metabolized drugs in states of profound physiologic changes, such as pregnancy.

Fully suppressive combination antiretroviral (ARV) regimens, in combination with other interventions, have reduced the risk of mother-to-child-transmission (MTCT) of HIV to less than 2% in the developed world.[1] Lopinavir/ritonavir (LPV/RTV) is a preferred first-line component of perinatal regimens in the United States.[1] Pregnancy induces a host of variable changes in physiology throughout its course that can affect the pharmacokinetic (PK) properties of ARVs.[2] LPV/RTV are highly protein-bound substrates, inducers, and inhibitors of the CYP450 enzyme system and drug transporters,[3,4] and total drug exposures decrease substantially during the second and third trimesters.[5–13] **Table 1** provides a brief overview of the clinical studies documenting this effect. In 2005, LPV/RTV was reformulated from a soft-gel capsule to a Meltrex tablet,[14] with improved bioavailability and less impact of pregnancy on PK,[7] although guidelines and some experts recommended increased doses of LPV/RTV from 400/100 mg to 600/150 mg b.i.d. with the tablet formulation.[1]

Despite decreases in total LPV concentrations, most investigations into the unbound, virologically active concentrations of LPV have demonstrated that they remain well above wildtype IC_{50} values, and do not significantly increase with increased LPV/RTV dosing.[13–17] Recently, the US Food and Drug Administration (FDA) approved a change to the labeling of the Kaletra (AbbVie, North Chicago, IL) tablet, indicating a dosage increase in pregnancy is not needed in women with susceptible virus.[18] No clinical data exist to make recommendations regarding dosage requirements for women who may have reduced susceptibility to LPV. Using data from a study of 12 HIV-infected pregnant women who underwent an empiric dosage adjustment in the third trimester from 400/100 mg to 500/125 mg b.i.d. where unbound LPV/RTV concentrations were measured,[13] a population PK model was developed. Simulations of unbound concentrations under three dosing scenarios and five viral resistance patterns were then undertaken to

[1]UNC Eshelman School of Pharmacy, University of North Carolina at Chapel Hill, Chapel Hill, North Carolina, USA; [2]Division of Infectious Diseases, School of Medicine, University of North Carolina at Chapel Hill, Chapel Hill, North Carolina, USA. *Correspondence to: JB Dumond (jdumond@unc.edu)
Received 22 October 2015; accepted 26 January 2016; published online on 22 March 2016. doi:10.1002/psp4.12065

Table 1 Literature review of pharmacokinetics alteration of LPV/r in pregnancy

Reference	Sample size	Dose used (administered twice daily, with nucleoside backbone)	Sampling schedule	Conclusions	Notes
Stek *et al.*, AIDS, 2006 (12)	17	400/100 mg LPV/r capsules	30–36 weeks, 6–12 weeks PP	AUC decreased 28%, C_{12} decreased 56% in the 3rd trimester, compared to postpartum	82% of the pregnant and 25% of the pp women did not meet the target LPV AUC, 52 μg* h/ml.
Manavi *et al.*, AIDS, 2007 (8)	26	400/100 mg LPV/r capsules	30–34 weeks	Only trough concentrations measured; subtherapeutic LPV concentrations found in four women (15.4%).	No nonpregnant arm was present.
Mirochnick *et al.*, JAIDS, 2008 (9)	26	400/100 mg LPV/r capsules during 2nd trimester, and 533/133 mg capsules during 3rd trimester through 2 weeks PP	2nd and 3rd trimester, 2 weeks PP	41% decrease in 3rd trimester LPV AUC and 31% decrease in LPV C_{12} compared to postpartum 2nd vs. 3rd trimesters: 30% decrease in AUC 2nd trimester vs. pp: 52% decrease in AUC	
Best *et al.*, JAIDS, 2010 (5)	33	400/100 mg tablets during 2nd trimester, 600/150 mg tablets during 3rd trimester, and 400/100 mg tablets postdelivery	2nd and 3rd trimester, and 2 weeks PP	27% decrease in AUC and 28% decrease in C_{12} in 3rd trimester compared to PP 2nd vs. 3rd trimesters: 23% decrease in AUC, 44% decrease in C_{12} 2nd trimester vs. pp: 49% decrease in AUC, 55% decrease in C_{12}	$N = 11$, 33 and 27 for each period, respectively
Ramautarsing *et al.*, AIDS, 2011 (10)	20	400/100 mg tablets	20 weeks (optional), 33 weeks, and 12 weeks PP	Mean LPV AUC was 24% lower at week 33 of gestation vs. PP ($P = 0.02$).	Thai women; 19/20 women had LPV trough concentrations >1.0 mg/l in the 3rd trimester, 20/20 at postpartum
Else *et al.*, Antimicrob. Agents Chemother., 2012 (7)	19 (8 in Cohort 1, 11 in Cohort 2)	Cohort 1: LPV/r 400/100 mg capsules; Cohort 2: 400/100 mg tablets	2nd and 3rd trimesters, 4-6 weeks PP	Cohort 1: 2nd vs. 3rd trimester: 35% decrease in AUC Cohort 2: 2nd vs. 3rd trimesters: 28% decrease in AUC; 3rd trimester vs. PP: 35% decrease in AUC Troughs decreased between 2nd and 3rd trimesters, 3rd trimester and PP	No postpartum comparison available for Cohort 1
Patterson *et al.*, JAIDS, 2012 (13)	12	400/100 mg LPV/r tablets from enrollment to 30 weeks; 500/125mg LPV/r tablets from 30 weeks to 2 weeks PP; 400/100 mg LPV/r tablets thereafter	20-24 weeks, 30 weeks, 32 weeks, 8 weeks PP	25% dose increase resulted in ~10% increase in total LPV concentrations; Trough concentration at 30 weeks significantly lower than PP before dose increase	Unbound LPV/r also measured
Calza *et al.*, Scand. J. Infect. Dis., 2012 (6)	41 (21 pregnant, 20 nonpregnant)	400/100 mg LPV/r tablets	28-34 weeks gestation, non-pregnant controls	13% decrease in trough LPV concentrations in 3rd trimester vs. non-pregnant controls was not statistically significant ($P = 0.411$).	
Santini-Oliveira *et al.*, Antimicrob. Agents Chemother., 2014 (11)	60 (n = 30 in each dosing arm)	400/100 mg vs. 600/150 mg LPV/r tablets during pregnancy; 400/100 mg tablets for 6 weeks PP	2nd and 3rd trimester, PP	400/100 mg arm: minimum LPV concentrations of 4.4, 4.3, and 6.1 μg/ml in 2nd and 3rd trimesters and PP, respectively, compared to 7.9, 6.9, and 9.2 μg/ml in the 600/150 mg arm. The mean values of LPV C_{max}, AUC_{0-12}, C_{12} were significantly lower than those at the PP visit ($P < 0.01$)	

LPV, lopinavir; LPV/r, lopinavir/ritonavir; AUC, area under the curve; C_{12}, concentration 12 hours postdose; pp, postpartum.

inform dosing recommendations with reduced viral susceptibility.

METHODS

Clinical study conduct

A detailed description of study conduct has been previously published.[13] Briefly, HIV-infected pregnant women receiving LPV/RTV in combination with nucleoside agents were enrolled at the University of North Carolina at Chapel Hill and Northwestern University. Subjects underwent intensive PK sampling at four visits over the course of pregnancy: 20–24 weeks' gestation at a dose of 400/100 mg b.i.d.; 30 weeks' gestation at 400/100 mg b.i.d., followed by a dose increase to 500/125 mg b.i.d.; 32 weeks' gestation at 500/125 mg b.i.d.; ~8 weeks postpartum and at steady state of the 400/100 mg b.i.d. dosing. Albumin and alpha-1 acid glycoprotein (AAG) concentrations were measured at each visit. The UNC Biomedical Institutional Review Board approved this study (NCT00766818).

Drug concentrations

Total LPV/RTV concentrations were measured in plasma using validated high-performance liquid chromatography/ultraviolet (HPLC/UV) methods.[19] Unbound LPV/RTV concentrations were measured using rapid equilibrium dialysis and liquid chromatography/mass spectrometry (LC/MS) methods as previously described.[13,20]

Population pharmacokinetic modeling and simulation

Population PK analysis was performed using NONMEM 7.3 (ICON Development Solutions, Hanover, MD). R (v. 3.1.0, r-project.org) was used for data management, statistical analysis, and graphical analysis. Pirana (v. 2.9.2) was used for model management and output visualization. The ADVAN13 subroutine and first-order conditional estimation (FOCE) method with interaction was used for model development. Noncompartmental analysis (NCA) was performed using Phoenix WinNonlin 6.3 (Pharsight, St. Louis, MO) to calculate the areas under the concentration vs. time curve (AUC). Repeated measures analysis of variance (ANOVA) was used to compare the unbound fraction of LPV and RTV, AAG levels, and albumin levels across study visits. Data were log-transformed to achieve a normal distribution. $P < 0.05$ was considered statistically significant.

LPV and RTV structural model

LPV and RTV were initially modeled separately. Unbound and total concentrations were comodeled with unbound drug as the central compartment. To select the protein binding model, bound concentrations were plotted against unbound concentrations for each subject by each study visit to examine the protein binding behavior. One-compartment and two-compartment models were tested for both drugs. Zero-order, sequential first- and zero-order, first-order with or without a lag time, and transit compartment model were tested for each drug for its absorption model. Interindividual variability (IIV) and interoccasion variability (IOV) were assumed to be exponential and are presented as:

$$\theta_{ij} = \theta \times e^{\eta_i + \kappa_{ij}} \quad (1)$$

where θ_{ij} denotes individual parameter of the *i*th subject in the *j*th occasion, θ denotes population parameter, η_i represents the deviation from the population parameter of the *i*th subject, and κ_{ij} represents the random variable of the *i*th subject in the *j*th occasion. Both IIV and IOV were assumed to be normally distributed. Correlations between IIVs were examined by post hoc random variable plots and their correlation coefficients (R) from the correlation matrices for random effects in the NONMEM output. Proportional, additive, and combined proportional-additive error models were tested for residual variability. The effect of total body weight and lean body mass[21–23] on apparent intrinsic clearance (CL_u/F) and apparent volume of distribution (V/F) were examined in both models using the empirical allometric scaling factors, 0.75 and 1, respectively. Model discrimination was determined by objective function values (OFV), using the likelihood ratio test ($\alpha = 0.05$), and diagnostic plots.

Covariate evaluation

Forward addition/backward elimination was performed for this analysis ($\alpha = 0.05/0.01$). The effects of study visit, gestational week, and race were tested for CL_u/F, V_u/F, and absorption parameter(s). The postpartum study visit and the African-American population were set as the references. Week of gestation was coded as zero for the postpartum visit. Parameter-covariate pairs were selected by examining the individual predicted PK parameters vs. covariate plots. Race, body mass index (BMI), pregnancy, and the concentrations of AAG and albumin were examined on f_u. Categorical variables were incorporated in the model as:

$$\theta = \theta_0 \times \theta_1^{X_1} \times \theta_2^{X_2} \times \ldots \times \theta_i^{X_i} \quad (2)$$

where θ_0 is the population parameter of the reference population, θ_i is the fold change of parameter in the *i*th category from the reference, *X* is the tested covariate, and *Xi* was assigned to 1 when the observation is within the *i*th category and otherwise 0.

Continuous variables were tested with proportional linear model, power model, or exponential model, as:

$$\theta = \theta_1 \times [1 + \theta_2 \times (X - median(X)] \quad (3)$$

$$\theta = \theta_1 \times [X / median(X)]^{\theta_2} \quad (4)$$

$$\theta = \theta_1 \times e^{\theta_2 \times [X - median(X)]} \quad (5)$$

where θ is the population PK parameter, θ_1 is the parameter of the population with the median X value, and θ_2 is the covariate effect coefficient.

LPV-RTV interaction modeling

Several approaches to test the effect of RTV exposure on LPV PK were explored: As part of the covariate evaluation, post hoc RTV AUCs were tested for the LPV CL_u/F using exponential model, power model, and I_{MAX} model as:

$$CL_{u,LPV} = \theta_1 \times e^{-coef \times [AUC_{u,RVT} - median(AUC_{u,RTV})]} \quad (6)$$

$$CL_{u,LPV} = \theta_1 \times [AUC_{u,RTV} / median(AUC_{u,RTV})]^{-coef} \quad (7)$$

$$CL_{u,LPV} = \theta_2 \times (1 - \frac{I_{MAX} \times AUC_{u,RTV}}{AUC_{50} + AUC_{u,RTV}}) \quad (8)$$

where $CL_{u,LPV}$ represents the population LPV intrinsic clearance. θ_1 and θ_2 denote the intrinsic LPV clearance with median unbound RTV AUC and without RTV, respectively. Coef presents the RTV inhibition coefficient. I_{MAX} is the maximum inhibitory effect and is fixed to 1. AUC_{50} is the unbound RTV concentration resulting in 50% inhibition, and $AUC_{u,RTV}$ represents unbound RTV area under the curve.

In an alternative approach, the interaction of LPV and RTV was evaluated based on the two individual models, and was described as the influence of unbound RTV concentrations or AUCs on LPV intrinsic clearance. In terms of RTV concentrations, an exponential model, a power model and a simple I_{MAX} model were used to characterize the interaction, as:

$$CL_{u,LPV} = \theta_1 \times e^{-coef \times [C_{u,RVT} - median(C_{u,RTV})]} \quad (9)$$

$$CL_{u,LPV} = \theta_1 \times [C_{u,RVT} / median(C_{u,RTV})]^{-coef} \quad (10)$$

$$CL_{u,LPV} = \theta_2 \times (1 - \frac{I_{MAX} \times C_{u,RTV}}{IC_{50} + C_{u,RTV}}) \quad (11)$$

where $CL_{u,LPV}$ represents the population LPV intrinsic clearance. θ_1 and θ_2 denote the intrinsic LPV clearance with median unbound RTV concentration and without RTV, respectively. Coef presents the RTV inhibition coefficient. I_{MAX} is the maximum inhibitory effect, and is fixed to 1. IC_{50} is the unbound RTV concentration resulting in 50% inhibition, and $C_{u,RTV}$ represents unbound RTV concentration.

In terms of RTV AUCs, the same model types as described in the covariate analysis section were evaluated. RTV AUCs were obtained in the control stream as:

$$AUC_{u,RTV} = \frac{Dose_{RTV}}{CL_{u,RTV}/F} \quad (12)$$

The interaction was tested with and without the covariate effects on LPV intrinsic clearance. Model discrimination was based on OFV, and a decrease of 3.84 in OFV ($\alpha = 0.05$) was considered significant.

Model validation

The goodness of fit of all models was evaluated by observation vs. individual prediction (IPRED) and population prediction (PRED) plots, and conditional weighted residuals (CWRES) vs. PRED and time plots. Visual predictive checks were performed after 1,000 simulations with the final parameter estimates. Bootstrap estimates were obtained from 500 replicates and compared to model estimates to evaluate parameter precision.

Outlier determination and data exclusion

Since the sample size in this study is relatively small, excluding data points from analysis was approached conservatively to include as many subjects and samples as possible. In this analysis, outliers were determined in the conditional residual plots and those observations yielding a |CWRES| >6 were excluded for further analysis.[24]

Simulation of different LPV/RTV dosing regimens

Unbound LPV concentrations of 1,000 subjects were simulated at LPV/RTV dosing of 400/100 mg, 500/125 mg, and 600/150 mg b.i.d., at 32 weeks of gestation and postpartum. Unbound inhibitory quotient (IQ) were calculated from unbound trough concentrations ($C_{u,trough}$) as:

$$IQ = C_{u,trough} / IC_{50} \quad (13)$$

and were compared to the pharmacological effectiveness thresholds, as shown below. The percentages of IQs showing effectiveness or ineffectiveness at each dosing level and each viral resistance were calculated.

Virologic parameters

Although viral susceptibility was not determined in the clinical study, previous work has suggested cutoffs for LPV efficacy based on calculation of the unbound Inhibitory Quotient (IQ) from virtual viral phenotypes (reported as fold-change decreases in susceptibility, rather than individual genetic mutations).[25] Based on data in protease inhibitor-experienced patients, [26,27] protein-free IC_{50} increases of 4-, 10-, 20-, and 40-fold from wildtype virus were considered in the third trimester at the increased and standard dosing. For each simulated subject ($n = 1{,}000$), the unbound LPV trough concentration (at 12 hours postdose) in the third trimester was used to calculate the IQ (unbound LPV trough/viral IC_{50}) under five viral resistance scenarios,[28] using 0.69 ng/mL as the wildtype IC_{50}.[25] IQs greater than 15 were considered effective, while those <4 were considered ineffective.[29] The same simulations and calculations were performed using model parameter estimates for 1,000 virtual subjects postpartum.

RESULTS

Demographics of the 12 enrolled women have been published.[18] Briefly, the subjects ranged in age from 18–35 years old with a median age of 28 years. Median weight at screening was 87.4 kg, range of 45.3–142.6 kg. Most of the subjects were African-American (75%) and antiretroviral-treatment-naive (67%). Plasma protein albumin and AAG levels (median, $25^{th}-75^{th}$ percentile) were 4.2 (4.1–4.4) g/dL and 82 (72–116) mg/dL at 8 weeks postpartum, respectively, and were significantly decreased ($P < 0.001$ for albumin and $P = 0.011$ for AAG) during pregnancy. CD4 cell counts were >400 cells/μL throughout the study. Suppressed viral load (<48 copies/mL) was observed in all subjects in the latter part of the study. Concentration vs. time profiles of all the subjects across four study visits are presented in **Supplementary Material S1**. In total, 330 plasma samples were available for analysis. No BLQ data were present, and the truncated concentration vs. time profiles in three subjects were due to either missing samples or insufficient sample volumes for unbound concentration analysis.

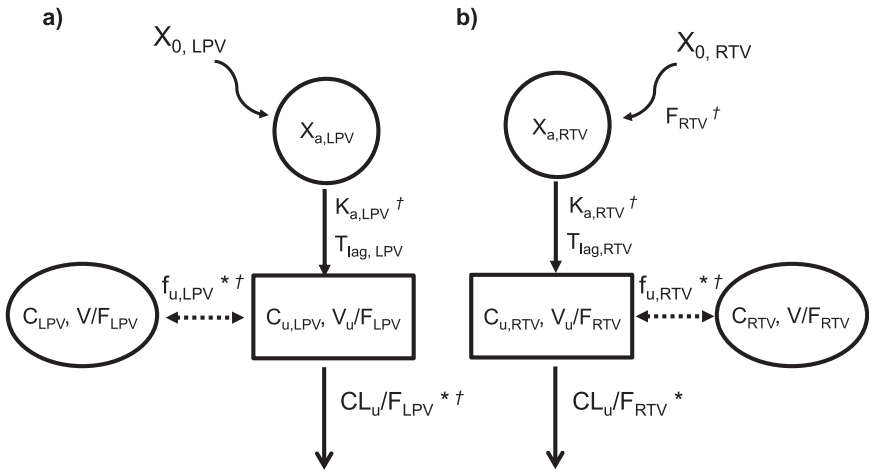

Figure 1 Schematic illustrations of the pharmacokinetic model structure for (**a**) lopinavir and (**b**) ritonavir. X_0, oral dose; X_a, amount of drug in the absorption compartment; k_a, first-order absorption rate constant; T_{lag}, absorption lag time; f_u, unbound fraction; C_u, unbound concentration; C, total concentration; V_u/F, apparent volume of distribution of unbound drug; V/F, volume of distribution of total drug; CL_u/F, apparent unbound drug clearance or intrinsic clearance; F, bioavailability; LPV, lopinavir; RTV, ritonavir. * and † denote the interindividual variability and interoccasion variability on the parameters in the final model, respectively.

LPV individual model

The LPV model structural is presented in **Figure 1a**. Unbound LPV concentrations were well described using a one-compartment model with first-order absorption and elimination. A lag time was included in the absorption phase. Zero-order, sequential zero- and first-order absorption, and transit compartment models did not significantly improve the model. A linear protein binding model was chosen to describe the relationship between the unbound and total concentrations, as only one subject in the fourth visit showed a minimal trend of saturable binding (data not shown). Interindividual variability (IIV) was included on the apparent intrinsic clearance (CL_u/F) and unbound fraction (f_u). Incorporating an interoccasion variability (IOV) in CL_u/F, absorption rate constant (k_a), and f_u decreased the OFV by 313.3, 17.3, and 29.3 sequentially. The empirical allometric effect of body weight or lean body mass on CL_u/F and apparent unbound volume of distribution (V_u/F) was not justified in the model, as determined by a likelihood ratio test. The residual variability of both total and unbound LPV were described using a proportional model. The final PK parameter and bootstrap estimates are presented in **Table 2**.

In the covariate analysis, while study visit and the week of gestation were both significant covariates on CL_u/F, the latter could describe the change of the apparent intrinsic clearance across the study period in a more parsimonious manner, and this relationship was well described by an exponential function as:

$$CL_u/F_{LPV} = \theta \times e^{coef \times WEEK} \quad (14)$$

where θ is the population parameter estimate of LPV apparent intrinsic clearance at week zero of gestation, *coef* is the week effect coefficient, and *WEEK* denotes the gestational week. Post hoc estimates of CL_u/F and the back-calculated total body clearance for the four study visits are summarized in **Table 3.** Compared to 8 weeks postpartum, the median CL_u/F of LPV increase by 38%, 56%, and 61% at 20–24 weeks, 30 weeks, and 32 weeks of gestation, respectively.

For LPV f_u, none of the tested covariates, including AAG, albumin levels, BMI, race, study visit, and pregnancy were significant (**Supplementary Material S2**). This result was consistent with the insignificant difference of the unbound AUC fractions across study visits analyzed by repeated-measures ANOVA (**Supplementary Material S3a,c**).

RTV individual model

The structural model of RTV, as presented in **Figure 1b**, was similar to that of LPV, except for that in the RTV model:

1. Both CL_u/F and V_u/F were adjusted for body weight using empirical allometric rule;
2. IIV were included on CL_u/F and f_u, with an estimated off-diagonal relationship;
3. In addition to IOVs on k_a and f_u, including IOV on bioavailability (F) significantly improved the model fit, while IOV on CL_u/F was not significant after IOV on F was incorporated.

Again, week of gestation was the most significant covariate for CL_u/F, and the effect size of gestation week for RTV apparent intrinsic clearance was larger than that for LPV, with the estimated coefficient of 0.0184 for RTV vs. 0.0148 for LPV.

Including lean body mass in the structural model did not perform better than total body weight. IIVs on the coefficient were not justified for either LPV or RTV, implying the similar change of the clearance among the studied subjects. Covariate analysis of RTV f_u found no significant effects of the tested variables (**Supplementary Material S2**), and this was confirmed with the repeated-measure ANOVA on

Table 2 Parameter estimates of final lopinavir and ritonavir models

	Lopinavir		Ritonavir	
Parameter (units)	**Estimate**	**Bootstrap estimates (95% CI)**	**Estimate**	**Bootstrap estimates (95% CI)**
CL_u/F (L/h)	167	167 (136, 202)	160 (per 70kg)	157 (120, 202)
CL/F (L/h)[a]	4.31	—	23.8 (per 70kg)	—
V_u/F (L)	3430	3325 (2655, 4256)	1560 (per 70kg)	1630 (1040, 2100)
V/F (L)[b]	88.5	—	232 (per 70kg)	—
k_a (h^{-1})	1.07	0.906 (0.582, 1.78)	1.01	1.01 (0.340, 2.00)
f_u (%)	2.58	2.58 (2.48, 2.71)	14.9	14.8 (12.1, 18.1)
Lag time (h)	1.77	1.75 (1.25, 1.93)	1.86	1.86 (1.67, 1.94)
Coefficient of gestational week impact on CL_u/F	0.0148	0.0148 (0.00835, 0.0223)	0.0184	0.0188 (0.0129, 0.0262)
Interindividual variability (%CV)				
CL_u/F	2.70	2.10 (0.32, 11.4)	8.5	10.6 (1.92, 19.0)
f_u	4.60	3.81 (0.32, 10.3)	24.4	23.3 (12.2, 34.4)
IIV correlation (r)				
ηCL -ηf_u	—	—	−0.95	—
Interoccasion variability (%CV)				
CL_u/F	24.7	23.4 (16.1, 29.7)	—	—
k_a	138	135 (82.9, 202)	141.8	142 (81.5, 201)
F	—	—	36.2	30.9 (17.1, 46.1)
f_u	10.0	9.98 (4.68, 13.3)	23.5	20.8 (12.6, 28.6)
Residual error (%CV)				
Unbound	24.4	24.0 (21.1, 27.8)	42.7	43.0 (38.2,50.5)
Total	18.4	18.1 (14.0, 23.2)	26.9	27.8 (23.1, 33.4)
Residual correlation (r)				
$\sigma_{unbound}$ - σ_{total}	0.614	—	0.611	—

CL_u/F, apparent intrinsic clearance; CL/F, apparent total body clearance; V_u/F, apparent volume of distribution of unbound drug; V/F, apparent volume of distribution of total drug; k_a, first-order absorption rate constant; f_u, unbound fraction; IIV, interindividual; CV, coefficient of variation; CI, 95% confidence interval; r, correlation coefficient.
[a]$CL/F = f_u \times CL_u/F$.
[b]$V/F = f_u \times V_u/F$.

unbound RTV AUC fraction (**Supplementary Material S3b,d**).

LPV-RTV interaction modeling

When tested as a covariate, unbound RTV AUC did not have significant influence on LPV PK (**Supplementary Material S2**). When the interaction was tested in the joint model, the PK parameters of RTV were fixed to reduce the complexity of the modeling process. The basic model for this analysis was the combination of the LPV and RTV final model from the above analysis, with the correlations of their residual errors estimated. Similar values were obtained for LPV CL_u/F (167 L/h vs. 167 L/h) and gestational week coefficients (0.149 vs. 0.148) from this basic model and the individual model. Among the six tested models, the exponential model in expression of unbound RTV concentrations provided the lowest OFV; however, incorporating the interaction did not improve the model fit significantly (**Supplementary Material S4**). The coefficient value of the interaction was 0.0028, corresponding to −3% to +11% of inhibition on LPV clearance, given the 5th and 95th percentile of unbound RTV concentration. When the interaction was evaluated without the gestational age effect on LPV clearance, the OFV increased by 13.0, indicating the RTV concentrations could not sufficiently explain the longitudinal change of LPV clearance, even though a slight decrease of gestational week effect on LPV clearance (**Supplementary Material S4**) compared to the basic model was observed.

Therefore, the interaction model was not adopted in subsequent analysis. NONMEM control streams for individual

Table 3 Post hoc clearance estimates across visits

	Visit 1 (20–24 weeks)	Visit 2 (30 weeks)	Visit 3 (32 weeks)	Visit 4 (8 weeks postpartum)
$CL_{u,LPV}/F$ (L/hr)	232 (226, 237)	261 (255, 264)	269 (263, 276)	167 (165, 168)
CL_{LPV}/F^* (L/hr)	5.92 (5.22, 7.22)	6.69 (5.73, 8.21)	6.94 (5.90, 8.46)	4.28 (3.65, 5.25)
$CL_{u,RTV}/F$ (L/hr)	273 (161, 421)	337 (184, 473)	357 (191, 508)	178 (101, 257)
CL_{RTV}/F^* (L/hr)	38.2 (26.0, 42.1)	52.3 (33.6, 74.1)	58.5 (32.6, 93.6)	26.9 (16.6, 37.5)

The clearance estimates are presented as median (range). $CL_{u,LPV}/F$, lopinavir apparent intrinsic clearance; CL_{LPV}/F, lopinavir total body clearance; $CL_{u,RTV}/F$, ritonavir apparent intrinsic clearance; CL_{RTV}/F, ritonavir total body clearance.
*Total body clearance = intrinsic clearance × lopinavir unbound fraction.

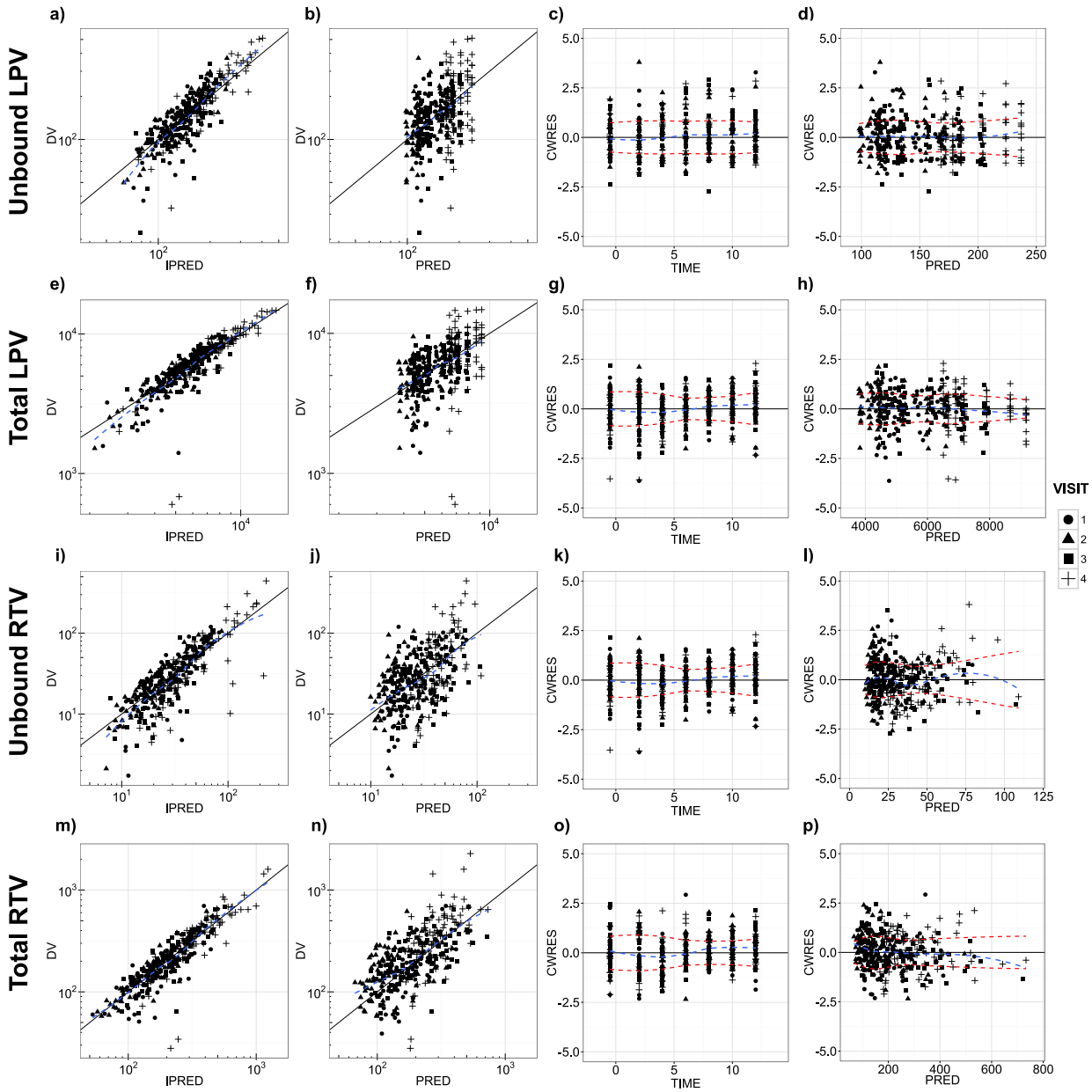

Figure 2 Diagnostic plots. (**a–d**) Unbound lopinavir (LPV), (**e–h**) total LPV, **(i–l)** unbound ritonavir (RTV), and (**m–p**) total RTV. From the left to the right are observation (DV) vs. individual prediction (IPRED), observation vs. population prediction (PRED), conditional weighted residual (CWRES) vs. time and conditional weighted residual vs. population prediction plots. The solid lines in the left two columns represent the lines of unity. The blue dashed lines are loess regression lines. The red dashed lines in right columns are loess regression lines of the absolute residual values. Values from different visits are denoted in different shapes.

and interaction models are provided in **Supplementary Material S5**.

Model validation

The diagnostic plots for LPV and RTV (**Figure 2**) and individual goodness of fit plots (**Supplementary Material S6**) showed that the observed data were fairly well predicted, with no obvious bias in the model. The visual predictive check demonstrated a good performance of the model in predicting both LPV and RTV (**Figure 3**) concentrations, with the observed percentiles well captured by the predicted percentiles and corresponding 95% confidence intervals.

Simulated unbound LPV inhibitory quotients (IQs)

The unbound LPV IQs at 32 weeks gestation and postpartum, under three different dosing strategies, are summarized in **Table 4.** The percentage of IQs showing effectiveness (>15) were calculated for each scenario. Overall, the percentage of effective IQs in the third trimester were no greater than those in postpartum. With up to a fourfold increase in unbound IC_{50}, over 90% of the simulated subjects were

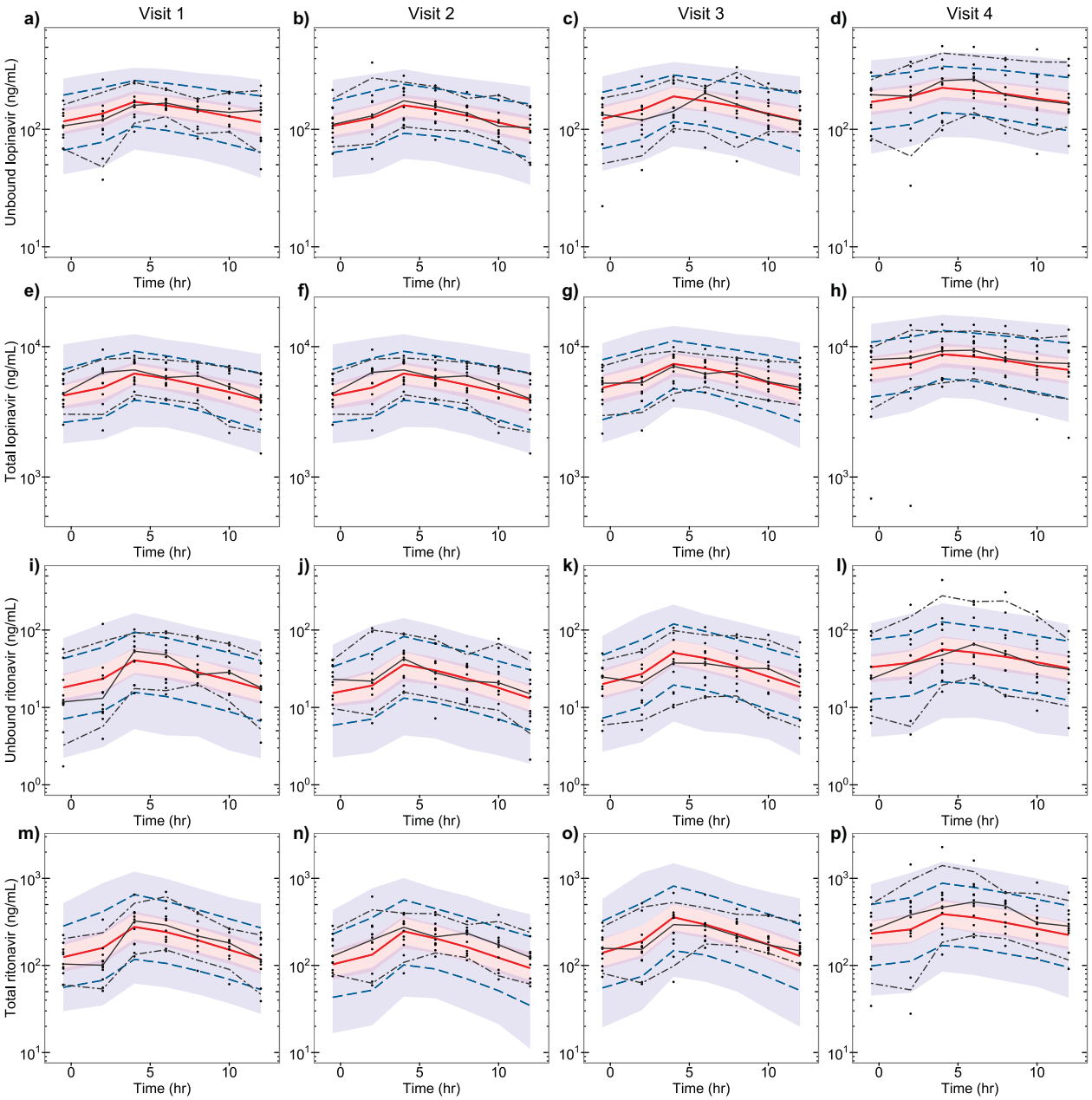

Figure 3 Visual predictive checks. (**a–d**) Unbound lopinavir (LPV), (**e–h**) total LPV, **(i–l)** unbound ritonavir (RTV), and (**m–p**) total RTV. The colored lines represent the prediction percentiles: red solid lines for medians and blue dashed lines for 5th and 95th percentiles of prediction. The black lines represent the observation percentiles: solid lines for medians and dot-dash lines for 5th and 95th percentiles of observation. The black dots represent the observed data. The colored shaded areas are the 95% confidence intervals (CI) of the prediction percentiles: red shading for 50th percentiles and blue shading for 5th and 95th percentiles.

predicted to have effective IQs, and the difference between the third trimester and postpartum was minimal. When unbound IC_{50} was increased 10-fold, the percentage of effective IQs significantly decreased to less than 50% in the third trimester, with the standard dose of 400/100 mg. With dose increased by 25% and 50%, this percentage could be brought up to 60% and 77%, respectively. Postpartum, the effect of increasing the dose was less than that in the third trimester, with 89–98% effective IQs predicted. When unbound IC_{50} was increased 20-fold, less than 20% of the effective IQs were predicted for the third trimester, regardless of an increased dose. For subjects in the postpartum period, increasing the dose could bring this percentage from 30% to 70%. When unbound IC_{50} increased 40-fold, 90% or more of simulated subjects did not achieve effective IQs. The full comparison across the three dosing strategies including the percentage of ineffectiveness (IQ <4) are presented in **Supplementary Material S7** for 32 weeks of gestation (third trimester) and **Supplementary Material S8** for postpartum.

Table 4 Simulated inhibitory quotients (IQs) at different dosing strategies in the third trimester and postpartum and their effectiveness to different viral resistance levels

Viral resistance pattern	400/100 mg twice daily				500/125 mg twice daily				600/150 mg twice daily			
	Third trimester		Postpartum		Third trimester		Postpartum		Third trimester		Postpartum	
	IQ (mean ± SD)	%IQ > 15	IQ (mean ± SD)	%IQ > 15	IQ (mean ± SD)	%IQ > 15	IQ (mean ± SD)	%IQ > 15	IQ (mean ± SD)	%IQ > 15	IQ (mean ± SD)	%IQ > 15
Wild-type IC_{50}*	146.3 ± 60.4	100	257.9 ± 98.9	100	182.7 ± 79.3	100	321.7 ± 129.3	100	223.9 ± 93.6	100	394.2 ± 152.5	100
4-fold IC_{50} increase	36.6 ± 15.1	95.4	64.5 ± 24.7	99.7	45.7 ± 19.8	98.7	80.4 ± 32.3	100	56.0 ± 23.4	99.7	98.6 ± 38.1	100
10-fold IC_{50} increase	14.6 ± 6	40.9	25.8 ± 9.9	88.9	18.3 ± 7.9	59.8	32.2 ± 12.9	95	22.4 ± 9.4	77.3	39.4 ± 15.2	98.4
20-fold IC_{50} increase	7.3 ± 3	1.9	12.9 ± 4.9	30.4	9.1 ± 4	8.0	16.1 ± 6.5	51.1	11.2 ± 4.7	18.3	19.7 ± 7.6	69.9
40-fold IC_{50} increase	3.7 ± 1.5	0	6.4 ± 2.5	0.3	4.6 ± 2	0	8 ± 3.2	3.7	5.6 ± 2.3	0.3	9.9 ± 3.8	9.9

IC_{50}, half maximal inhibitory concentration; SD, standard deviation; %IQ>15 represents the percentage of the simulated subjects with inhibitory quotients that is greater than 15. IQs greater than 15 are considered to be effective.
*Wildtype IC_{50}: 0.69 ng/mL.

DISCUSSION

A population pharmacokinetic model describing longitudinal PK and intrinsic unbound clearance of LPV and RTV in HIV-infected pregnant women was developed. Distinct from other analyses that have detected the pregnancy effect at a single point, this secondary analysis of the unbound and total LPV and RTV profiles from four study visits was able to quantify the trajectory of clearance changes for these two drugs during pregnancy and postpartum. The post hoc PK estimates showed that the LPV apparent intrinsic clearance increased by 61% at 32 weeks of gestation, compared to postpartum. The unbound fractions of neither LPV nor RTV were significantly affected by the physiological alterations of pregnancy, e.g., decreased AAG and albumin concentrations or increased BMI. Based on 1,000 simulated subjects, the current standard LPV/RTV dose of 400/100 mg was predicted to produce effective unbound LPV IQs in over 90% of subjects with a $\leq$4-fold increase in viral IC_{50}, lending further support to the recent recommendations for maintaining Kaletra dosing at the standard dose in pregnancy.[14]

To our knowledge, this is the first model to use an exponential function to describe the longitudinal change of the apparent intrinsic clearance for LPV and RTV in pregnant women. The model indicated that gestational age has a more profound effect on the elimination of RTV than LPV, implying that RTV is more sensitive to physiologic changes, including the potential alteration of metabolic enzyme activity.[30] The increase in $CL_{u,LPV}/F$ is 38%, 56%, and 61% at 22 weeks, 30 weeks, and 32 weeks, respectively, of gestation compared to postpartum in terms of the median post hoc PK estimates. Decreases in the drug bioavailability, increase in metabolic enzyme activity, or both could explain this increase; however, our model could not quantitatively differentiate the effect of these two factors due to lack of i.v.-administration PK or a direct assessment of metabolic activity.

It has been theorized that the decrease in AAG during pregnancy might result in increased unbound fraction,[13] but this assumption was made based on saturation of protein binding in plasma. According to the protein binding analysis for each individual at each visit, most of the subjects did not exhibit a noticeable saturation in protein binding, even with very high concentrations. Therefore, a linear protein binding model was sufficient to describe the unbound and total concentrations. The concentrations of AAG and albumin did not have a significant effect on the unbound fractions of either LPV or RTV in the covariate analysis. *In vivo*, even though binding to AAG is subject to capability limiting, albumin is unlikely to be saturated[31]; thus, the subtle alteration in protein binding due to decreases in AAG and albumin concentrations might not be detected in this analysis, with limited sample size. The post hoc repeated-measured ANOVA testing of the difference among the unbound AUC fractions across the four study visits show no significant findings ($P > 0.05$) for LPV and RTV, which is consistent with the results in the population PK analysis.

The known interaction between LPV and RTV is not well characterized in this analysis. Neither unbound RTV AUCs

nor its concentrations could further improve the LPV model while accounting for the gestational age effect. The interaction analysis in terms of AUC is consistent with insignificance of the post hoc unbound RTV AUCs in the covariate analysis. This is probably because the clinical study was not designed to detect the interaction; therefore, the data are not ideal for quantifying this, given the small sample size and time-varying pharmacokinetics inherent in the study design. Nevertheless, our analysis reports an interaction coefficient of 0.0028, or 0.00041 in terms of total RTV concentration, which is consistent with the interaction value of 0.00064 reported by Wang *et al.,*[32] using the same interaction function form.

The current analysis further extends the perspective on the use of the standard dose in HIV-infected women in the context of viral resistance. While the standard dose is sufficient for pregnant women with susceptible virus, increased doses are indicated in 10-fold increases in IC_{50}. When IC_{50} increases by $\geq$20 fold, an alternative regimen to LPV/r should be considered for pregnant women, especially in the third trimester.

While useful, this work does have some limitations. First, the viral susceptibility to LPV was not measured in these women, and thus this work is based on the literature and simulations and not clinical data. Additionally, the clinical data available to us did not include dosing at the 600/150 mg regimen, and the population model was used to predict these concentrations. Our simulated total concentrations are consistent with the literature,[5,11] so we believe this approach is reasonable. For the protein-binding model at this dose, we assume that the protein-binding behavior of LPV at this dose does not differ substantially from the observed behavior at the lower doses, supported by data that LPV protein binding is constant over a wide range of concentrations.[14] As with most studies in pregnancy, the sample size is small, potentially limiting model robustness and generalizability. These women, however, were intensively studied longitudinally, and contribute to one of the most comprehensive characterizations of LPV PK in pregnancy.

In summary, this model-based approach extends and refines the previously reported PK results for LPV, and supports the standard dosing regimen of LPV/RTV in pregnancy. These results are consistent with the observations that despite lower plasma LPV concentrations in pregnancy, virologic failure and risk of MTCT are rare events in pregnant women with susceptible virus.

Acknowledgments. The main study findings have been previously published as: Patterson KB, *et al*. Protein binding of lopinavir and ritonavir during 4 phases of pregnancy: implications for treatment guidelines. *J. Acquir. Immune Defic. Syndr.* **63(1),** 51–58 (2013). J Dumond is supported in part by K23-AI093156. H Prince is supported in part by the UNC Center for AIDS Research (P30AI050410). The original clinical study was supported by an investigator-initiated research grant from Abbott Virology (now AbbVie) to K Patterson (Principle Investigator). The authors thank the participants in the original study, and AbbVie (formerly Abbott Virology) for supporting this work. They thank Dr. Angela Kashuba for supervision of drug concentration analysis, helpful discussions, and oversight of the original clinical study. They also thank the members of the UNC Eshelman School of Pharmacy, Division of Pharmacotherapy and Experimental Therapeutics Modeling Discussion Group, particularly Dr. Alan Forrest and Dr. Daniel Gonzalez, for helpful discussions in preparing the revisions to the original article and Dr. Izna Ali, for assistance with the early stages of data analysis.

Conflict of Interest. This study was funded by an investigator-initiated award from Abbott Virology (now AbbVie, North Chicago, IL), makers of lopinavir/ritonavir, to K. Patterson. K. Patterson currently holds an additional investigator-initiated award from AbbVie for a retrospective review of antiretroviral safety in pregnancy.

Author Contributions. J.D. and J.C. wrote the article; J.D. and K.P. designed the research; K.P. and H.P. performed the research; J.D., K.P., S.M., and J.C. analyzed the data.

1. Panel on Treatment of HIV-Infected Pregnant Women and Prevention of Perinatal Transmission. Recommendations for Use of Antiretroviral Drugs in Pregnant HIV-1-Infected Women for Maternal Health and Interventions to Reduce Perinatal HIV Transmission in the United States. <http://aidsinfo.nih.gov/contentfiles/lvguidelines/PerinatalGL.pdf>. Accessed 25 January 2015.
2. Costantine, M.M. Physiologic and pharmacokinetic changes in pregnancy. *Front. Pharmacol.* **5**, 65 (2014).
3. Corbett, A.H. Kaletra (lopinavir/ritonavir). *Ann. Pharmacother.* **36**(7-8), 1193–1203 (2002).
4. Griffin, L., Annaert, P. & Brouwer, K.L. Influence of drug transport proteins on the pharmacokinetics and drug interactions of HIV protease inhibitors. *J. Pharm. Sci.* **100**(9), 3636–3654 (2011).
5. Best, B.M. *et al.* Lopinavir tablet pharmacokinetics with an increased dose during pregnancy. *J. Acquir. Immune Defic. Syndr. (1999)* **54**(4), 381–388 (2010).
6. Calza, L. *et al.* Lopinavir/ritonavir trough concentrations with the tablet formulation in HIV-1-infected women during the third trimester of pregnancy. *Scand. J. Infect. Dis.* **44**(5), 381–387 (2012).
7. Else, L.J. *et al.* Improved oral bioavailability of lopinavir in melt-extruded tablet formulation reduces impact of third trimester on lopinavir plasma concentrations. *Antimicrob. Agents Chemother.* **56**(2), 816–824 (2012).
8. Manavi, K., McDonald, A. & Al-Sharqui, A. Plasma lopinavir trough levels in a group of pregnant women on lopinavir, ritonavir, zidovudine, and lamivudine. *AIDS (Lond.)* **21**(5), 643–645 (2007).
9. Mirochnick, M. *et al.* Lopinavir exposure with an increased dose during pregnancy. *J. Acquir. Immune Defic. Syndr. (1999)* **49**(5), 485–491 (2008).
10. Ramautarsing, R.A. *et al.* Thai HIV-1-infected women do not require a dose increase of lopinavir/ritonavir during the third trimester of pregnancy. *AIDS (Lond.)* **25**(10), 1299–1303 (2011).
11. Santini-Oliveira, M. *et al.* Randomized clinical trial comparing the pharmacokinetics of standard- and increased-dosage lopinavir-ritonavir coformulation tablets in HIV-positive pregnant women. *Antimicrob. Agents Chemother.* **58**(5), 2884–2893 (2014).
12. Stek, A.M. *et al.* Reduced lopinavir exposure during pregnancy. *AIDS (Lond.)* **20**(15), 1931–1939 (2006).
13. Patterson, K.B. *et al.* Protein binding of lopinavir and ritonavir during 4 phases of pregnancy: implications for treatment guidelines. *J. Acquir. Immune Defic. Syndr. (1999)* **63**(1), 51–58 (2013).
14. Full US Prescribing Information. Kaletra (lopinavir/ritonavir) Tablets and Oral Solution. AbbVie Inc. Updated January 2015.
15. Aweeka, F.T. A, *et al.* Lopinavir protein binding in HIV-1-infected pregnant women. *HIV Med.* **11**(4), 232–238 (2010).
16. Fayet-Mello, A. *et al.* Free and total plasma levels of lopinavir during pregnancy, at delivery and postpartum: implications for dosage adjustments in pregnant women. *Antivir. Ther.* **18**(2), 171–182 (2013).
17. Fauchet, F. *et al.* Population approach to analyze the pharmacokinetics of free and total lopinavir in HIV-infected pregnant women and consequences for dose adjustment. *Antimicrob. Agents Chemother.* **59**(9), 5727–5735 (2015).
18. Administration. UFaD. Approval changes to the Kaletra (lopinavir/ritonavir) Label. January 28, 2015.
19. Choi, S.O., Rezk, N.L. & Kashuba, A.D. High-performance liquid chromatography assay for the determination of the HIV-protease inhibitor tipranavir in human plasma in combination with nine other antiretroviral medications. *J. Pharm. Biomed. Anal.* **43**(4), 1562–1567 (2007).
20. Boffito, M. *et al.* Lopinavir protein binding in vivo through the 12-hour dosing interval. *Ther. Drug Monit.* **26**(1), 35–39 (2004).
21. Green, B. & Duffull, S.B. What is the best size descriptor to use for pharmacokinetic studies in the obese? *Br. J. Clin. Pharmacol.* **58**(2), 119–133 (2004).

22. Hume, R. Prediction of lean body mass from height and weight. *J. Clin Pathol.* **19**(4), 389–391 (1966).
23. Abduljalil, K., Furness, P., Johnson, T.N., Rostami-Hodjegan, A. & Soltani, H. Anatomical, physiological and metabolic changes with gestational age during normal pregnancy: a database for parameters required in physiologically based pharmacokinetic modelling. *Clin. Pharmacokinet.* **51**(6), 365–396 (2012).
24. Friberg, L.E., Ravva, P., Karlsson, M.O. & Liu, P. Integrated population pharmacokinetic analysis of voriconazole in children, adolescents, and adults. *Antimicrob. Agents Chemother.* **56**(6), 3032–3042 (2012).
25. Hsu, A. *et al.* Pharmacokinetic-pharmacodynamic analysis of lopinavir-ritonavir in combination with efavirenz and two nucleoside reverse transcriptase inhibitors in extensively pretreated human immunodeficiency virus-infected patients. *Antimicrob. Agents Chemother.* **47**(1), 350–359 (2003).
26. Kempf, D.J. *et al.* Identification of genotypic changes in human immunodeficiency virus protease that correlate with reduced susceptibility to the protease inhibitor lopinavir among viral isolates from protease inhibitor-experienced patients. *J. Virol.* **75**(16), 7462–7469 (2001).
27. Mo, H. *et al.* Selection of resistance in protease inhibitor-experienced, human immunodeficiency virus type 1-infected subjects failing lopinavir- and ritonavir-based therapy: mutation patterns and baseline correlates. *J. Virol.* **79**(6), 3329–3338 (2005).
28. Young, T.P. *et al.* Prevalence, mutation patterns, and effects on protease inhibitor susceptibility of the L76V mutation in HIV-1 protease. *Antimicrob. Agents Chemother.* **54**(11), 4903–4906 (2010).
29. Hickman, D. *et al.* Estimation of serum-free 50-percent inhibitory concentrations for human immunodeficiency virus protease inhibitors lopinavir and ritonavir. *Antimicrob. Agents Chemother.* **48**(8), 2911–2917 (2004).
30. Aweeka, F. *et al.* Alteration in cytochrome P450 3A4 activity as measured by a urine cortisol assay in HIV-1-infected pregnant women and relationship to antiretroviral pharmacokinetics. *HIV Med.* e-pub ahead of print 2014.
31. Gulati, A., Boudinot, F.D.& Gerk, P.M. Binding of lopinavir to human α(1)-acid glycoprotein and serum albumin. *Drug Metab. Dispos.* **37**(8), 1572–1575 (2009).
32. Wang, K. *et al.* Integrated population pharmacokinetic/viral dynamic modelling of lopinavir/ritonavir in HIV-1 treatment-naive patients. *Clin. Pharmacokinet.* **53**(4), 361–371 (2014).

© 2016 The Authors CPT: Pharmacometrics & Systems Pharmacology published by Wiley Periodicals, Inc. on behalf of American Society for Clinical Pharmacology and Therapeutics. This is an open access article under the terms of the Creative Commons Attribution-NonCommercial License, which permits use, distribution and reproduction in any medium, provided the original work is properly cited and is not used for commercial purposes.

Supplementary information accompanies this paper on the *CPT: Pharmacometrics & Systems Pharmacology* website (http://www.wileyonlinelibrary.com/psp4)